SHARP

MICROWAVE OVEN

MODEL R-20A0(W)

CONTENTS

	Pages
Warranty	i-ii
Warning	1
Special Notes and Warning	2
Oven and Accessories / Installation	3
Control Panel	4
Before Operating	5
Setting the Clock	5
Microwave Power Level	5
Manual Operation	6
Microwave Cooking	6
Auto Menu Chart Guide	7
Other Convenient Functions	8
Time Defrost and Express Defrost Operation	9
Defrosting Advice	10
Reheating Advice	11
Care and Cleaning	12
Service Call Check	12
Specifications	12
Manual Chart Guides	A-1
Defrost Times for Meat, Poultry and Bread	A-1
Fresh Vegetable Chart	A-2
Frozen Vegetable Chart	A-3
Rice and Pasta Cooking Chart	A-3
Scrambled Egg Guide	A-3
Reheating/Defrosting Convenience	A-4
Cooking and Utensil Guide	A-5
Helpful Hints	A-6
Quick Reference Guide	A-7
Notes	

Thank you for buying a Sharp Microwave Oven.
Please keep this operation manual handy, as it describes all the features of your oven and will enable you to cook many varieties of foods.
The manual is divided into two sections:
1.OPERATION (P2~P12)
This section describes your oven and teaches you how to use all the features.
2.MANUAL COOKING GUIDES
This section is at the back of the manual, it contains the more commonly used information such as how to prepare food, which cooking utensil to use, standing time.

Please take some time to read your operation manual carefully, paying particular attention to the warnings and special notes, the automatic cooking menus programmed into your new oven have been carefully developed to give optimum results when the step by step instructions are followed.
When selecting another home appliance, please again consider our full range of Sharp products.

SHARP

WARRANTY

Congratulations on Your Purchase!

This Sharp Microwave Oven is warranted against faults in material and manufacture for 24 month period.

If service is required during the warranty period, please contact your nearest Sharp Approved Service Centre. These repairs would be carried out at no charge to the owner, subject to the conditions specified herein.

This warranty applies to normal domestic household use only.

This warranty does not extend to defects or injuries caused by or resulting from causes not attributable to faulty parts or the manufacture of the product, including but not limited to, defect or injury caused by or resulting from misuse, abuse, neglect, lack of maintenance, accidental damage, improper voltage, liquid spillage, vermin infestation, software, or any alterations made to the product which are not authorised by Sharp.

Please retain your sales documentation, as this should be produced to validate a warranty claim. This warranty is in addition to and in no way limits, varies or excludes any implied rights and remedies under any relevant legislation in the country of sale.

This warranty does not cover transportation to and from the Sharp Approved Service Centre. Goods presented for repair may be replaced by refurbished goods of the same type rather than being repaired. Refurbished parts may be used to repair the goods. The repair of your goods may result in the loss of user generated data, please ensure that you have saved this data elsewhere prior to repair.

SHARP

FOR PRODUCTS PURCHASED IN

NEW ZEALAND

CONTACT YOUR SELLING DEALER/RETAILER

OR CALL

SHARP CUSTOMER CARE

0800 501 201

https://www.sharp.net.nz/contact

SHARP CORPORATION OF NEW ZEALAND LIMITED

IMPORTANT NOTICE: This warranty applies only to products sold in New Zealand

IMPORTANT SAFETY INSTRUCTIONS : READ CAREFULLY AND KEEP FOR FUTURE REFERENCE.
To reduce the risk of fire in the oven cavity:

a. Do not overcook food.
b. Remove wire twist-ties from paper or plastic bags before placing bag in the oven.
c. Do not heat oil or fat for deep frying. The temperature of the oil cannot be controlled.
d. Look at the oven from time to time when food is heated in disposable containers made of plastic, paper or other combustible materials for signs of smoke or burning.
e. If materials inside the oven should ignite, or smoke is observed, keep oven door closed, turn oven off, and disconnect the power plug, or shut off power at the fuse or circuit breaker panel.

To reduce the risk of an explosion or delayed eruptive boiling when handling the container.
Your microwave oven is capable of heating food and beverages very quickly therefore, it is very important that you select the appropriate cooking time and power level for the type and quantity of food to be heated. If you are unsure of the cooking time and power level required, begin with low cooking times and power levels until the food is sufficiently heated evenly throughout.
Additionally:

a. Do not place sealed containers in the oven. Babies bottles fitted with a screw cap or teat are considered to be sealed containers.
b. Do not use excessive amount of time.
c. When boiling liquids in the oven, use a wide-mouthed container.
d. Stand at least for 20 seconds at the end of cooking to avoid delayed eruptive boiling of liquids.
e. Stir the liquid before and during cooking. Use extreme care when handling the container or inserting a spoon or other utensil into the container.

This oven is for home food preparation only and should only be used for heating, cooking and defrosting food and beverage.
It is not suitable for commercial, laboratory use, or heating therapeutic devices eg. Wheat bags.
Never operate the oven whilst any object is caught or jammed between the door and the oven.
Do not try to adjust or repair the oven yourself.
It is hazardous for anyone other than a qualified service technician trained by SHARP to carry out any service or repair operation. Especially those which involve the removal of a cover which gives protection against exposure to microwave energy are very hazardous.
Do not operate the oven if it is not working correctly or damaged until it has been repaired by a qualified service technician trained by SHARP. It is particularly important that the oven door closes properly and that there is no damage to:
(1) Door (warped), (2) Hinges and Latches (broken or loosened), (3) Door Seals, Sealing Surfaces and oven cavity (buckled or deformed), (4) Burn marks on the door seal faces.
Do not bump, or catch utensils, loose clothes and your accessories on the door safety latches when removing food from the oven.
Never poke an object, particularly a metal object, through a grille or between the door and the oven while the oven is operating.
Never tamper with or deactivate the door safety latches.
Always use oven gloves to prevent burns when handling utensils that are in contact with hot food. Enough heat from the food can transfer through utensils to cause skin burns.
Should the power supply cord become damaged, it must be replaced with a special cord supplied by a SERVICE CENTRE APPROVED BY SHARP and it must be replaced by a qualified service technician trained by SHARP in order to avoid a hazard.
If the oven lamp fails please consult your dealer or a qualified service technician trained by SHARP.
Avoid steam burns by directing steam away from the face and hands.
Slowly lift the furthest edge of a dish's cover including microwave plastic wrap etc., and carefully open popcorn and oven cooking bags away from the face.
Make sure that the power supply cord is undamaged, and that it does not run under the oven or over any hot surfaces or sharp edges.
To prevent the turntable from breaking:

a. Before cleaning the turntable with water, leave the turntable to cool.
b. Do not place anything hot on a cold turntable.
c. Do not place anything cold on a hot turntable.

Do not place anything on the outer cabinet.
Do not store food or any other items inside the oven.
Make sure the utensil does not touch the interior walls during cooking.
Only allow children to use the oven without supervision when adequate instructions have been given so that the child is able to use the oven in a safe way and understands the hazards of improper use.
This appliance is not intended for use by persons (including children) with reduced physical, sensory or mental capabilities, or lack of experience and knowledge, unless they have been given supervision or instruction concerning use of the appliance by a person responsible for their safety.
Children should be supervised to ensure that they do not play with the appliance.

SPECIAL NOTES & WARNING

	DO	DON'T
Eggs, fruits, vegetables, nuts, seeds, sausages and oysters	* Puncture egg yolks and whites and oysters before cooking to prevent "explosion". * Pierce skins of potatoes, apples, squash, hot dogs, sausages and oysters so that steam escapes.	* Cook eggs in shells. This prevents "explosion", which may damage the oven or injure yourself. * Cook hard/soft boiled eggs. * Overcook oysters. * Dry nuts or seeds in shells.
Popcorn	* Use specially bagged popcorn for the microwave oven. * Listen while popping corn for the popping to slow to 1-2 seconds.	* Pop popcorn in regular brown bags or glass bowls. * Exceed maximum time on popcorn package.
Baby food	* Transfer baby food to small dish and heat carefully, stirring often. Check for suitable temperature to prevent burns. * Remove the screw cap and teat before warming baby bottles. After warming shake thoroughly. Check for suitable temperature.	* Heat disposable bottles. * Overheat baby bottles. Only heat until warm. * Heat bottles with nipples on. * Heat baby food in original jars.
General	* Food with filling should be cut after heating, to release steam and avoid burns. * Use a deep bowl when cooking liquids or cereals to prevent boiling over.	* Heat or cook in closed glass jars or airtight containers. * Deep fat fry. * Heat or dry wood, herbs, wet papers, clothes or flowers. * Operate the oven without a load (i.e. an absorbing material such as food or water) in the oven cavity.
Liquids (Beverages)	* For boiling or cooking liquids see WARNING on page 2 to prevent explosion and delayed eruptive boiling.	* Heat for longer than recommended time. See REHEATING-FOOD CHART on page 8 .
Canned foods	* Remove food from can.	* Heat or cook food while in cans.
Sausage rolls, Pies, Christmas pudding	* Cook for the recommended time. (These foods have high sugar and/or fat contents.)	* Overcook as they may catch fire.
Meats	* Use a microwave proof roasting rack to collect drained juices.	* Place meat directly on the turntable for cooking.
Utensils	* Check the utensils are suitable for MICROWAVE cooking before you use them.	* Use metal utensils for MICROWAVE cooking. Metal reflects microwave energy and may cause an electrical discharge known as arcing.
Aluminium foil	* Use to shield food to prevent over cooking. * Watch for sparking. Reduce foil or keep clear of cavity walls.	* Use too much. * Shield food close to cavity walls. Sparking can damage the cavity.
Browning dish	* Place a suitable insulator such as a microwave and heat proof dinner plate between the turntable and the browning dish.	* Exceed the preheating time recommended by the manufacturer. Excessive preheating can cause the glass turntable to shatter and/or damage internal parts of the oven.

OVEN AND ACCESSORIES

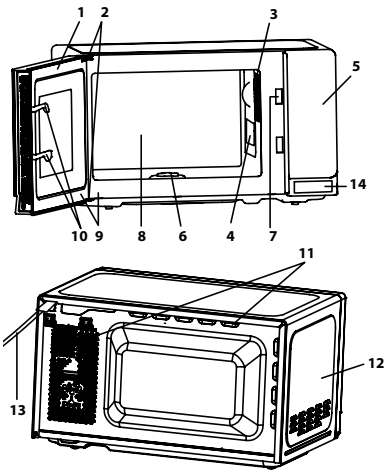

OVEN

1. Door
2. Door hinges
3. Oven lamp
4. Waveguide cover (DO NOT REMOVE)
5. Control panel
6. Coupling
7. Door latches
8. Oven cavity
9. Door seals and sealing surfaces
10. Door safety latches
11. Ventilation openings
12. Outer cabinet
13. Power supply cord
14. Door opening button

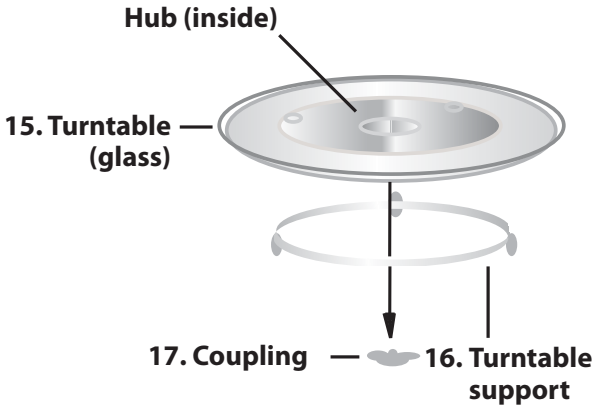

ACCESSORIES:

Check to make sure the following accessories are provided:

(**15**) Turntable (**16**) Turntable support (**17**) Coupling

Place the turntable support in the centre of the oven floor so that it can freely rotate around the coupling. Then place the turntable on to the turntable support so that it locates firmly into the coupling.

To avoid turntable damage, ensure dishes and containers are lifted clear of the turntable rim when removing them from the oven.

NOTE: When you order accessories, please mention two items: part name and model name to your dealer or SHARP authorised service agent.

INSTALLATION INSTRUCTIONS

1. Remove all packing materials from the oven cavity, **(do not remove the waveguide cover)**, and the feature sticker from the outside of the door, if there is one. Check the unit for any damage, such as a misaligned door, damaged door seals around the door or dents inside the oven cavity or on the door. If there is any damage, please do not operate the oven until it has been checked by a SERVICE CENTRE APPROVED BY SHARP and repaired, if necessary.
2. Accessories provided
   1) Turntable 2) Roller stay
   3) Operation manual and Cooking guide
3. Ensure that the coupling is installed.Place the turntable support on the oven floor, then place the turntable onto the turntable support and coupling, ensuring it is located firmly. Refer to the diagram above.NEVER operate the oven without the turtable.
4. This oven is designed for countertop or cabinet use as well. It should not be installed in any area where excessive heat and steam are generated, for example, next to a conventional oven unit. The oven should be installed so as not to block ventilation openings. Allow a space of at least 10 cm on the top, 5 cm on both sides and at the rear of the oven for adequate air circulation. When installing in a cabinet, the minimum inside dimension of the cabinet should be 542 mm (W) x 355 mm (H) x 377 mm (D). This oven is not designed for built-in installation.
   WARNING: The electrical outlet must be readily accessible so that the unit can be unplugged easily in an emergency.
5. Neither the manufacturer nor the distributors can accept any liability for damage to the machine or personal injury for failure to observe the correct electrical connecting procedure.
   The A.C. voltage must be single phase 230 – 240V, 50Hz.
6. This appliance must be earthed.
7. Operate the oven from a general purpose domestic outlet.
   If a generator is used, do not operate the oven with non-sinusoidal outputs.

CONTROL PANEL

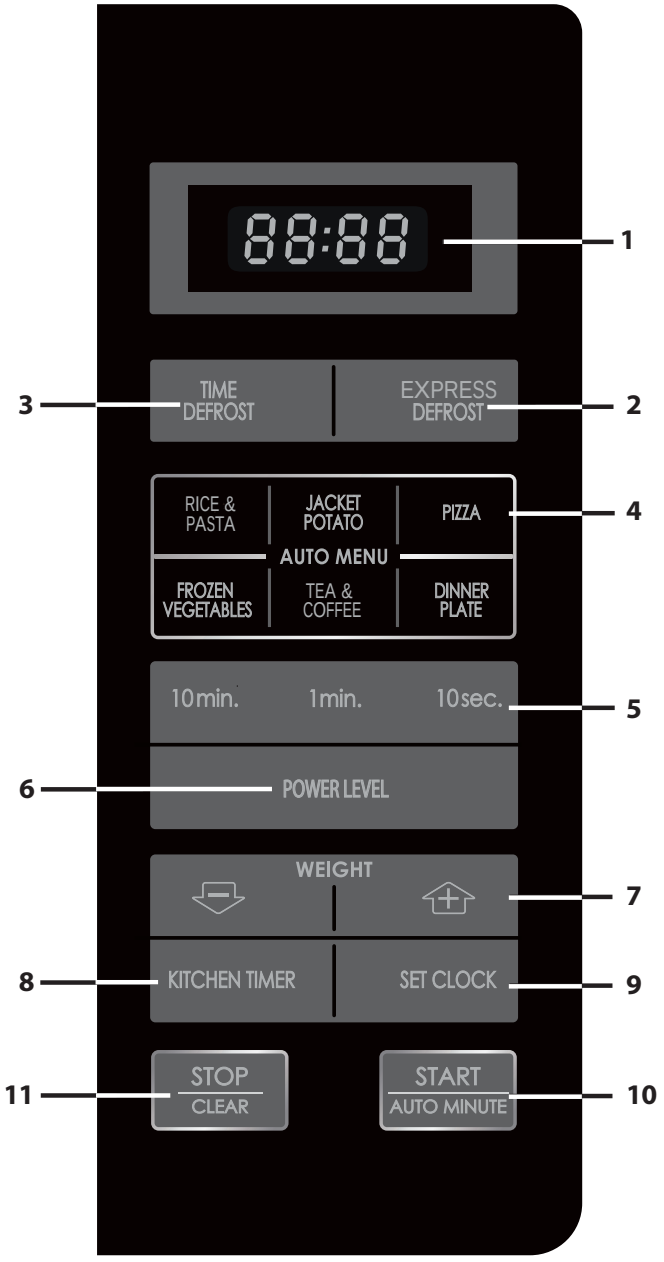

1. **DIGITAL DISPLAY**
2. **EXPRESS DEFROST key**
3. **TIME DEFROST key**
4. **AUTO MENU keys**

Rice & Pasta

Jacket Potato

Pizza

Frozen Vegetables

Tea & Coffee

Dinner Plate

5. **TIME keys**
   Press to enter time,and keep pressing to continuously increase time.
6. **POWER LEVEL key:**
   Press to select microwave power level.
7. **WEIGHT keys (up and down)**
   Press to increase/decrease weight,and keep pressing to continuously increase/decrease weight.
8. **KITCHEN TIMER key**
   Press to use as a minute timer, or to programme standing time.
9. **SET CLOCK key**
10. **START/AUTO MINUTE key**
11. **STOP/CLEAR key**

BEFORE OPERATION

Plug in the oven. The oven display will display: "0:00", an audible signal will sound once.

This model has a clock function and the oven uses less than 1.0 W in stand by mode.

To set the clock, see below.

SETTING THE CLOCK

Your oven has a 24 hour clock mode.

1. Press the **SET CLOCK** key SET CLOCK once and "00:00" will flash.
2. Press the time keys and enter the current time. Enter the hours by pressing the **10 min.** key and enter the minutes by pressing the **1 min.** and **10 sec.** keys.
3. Press the **SET CLOCK** key SET CLOCK to finish clock setting.

NOTES:

- If the clock is set, when cooking is complete, the display will show the correct time of day. If the clock has not been set, the display will only show "0:00" when cooking is complete.
- To check the time of day during a cooking process, press **SET CLOCK** key and the LED will display the time of day for 2-3 seconds. This does not affect the cooking process.
- In the process of clock setting, if the **STOP/CLEAR** key is pressed or if there is no operation within 1 minute, the oven will go back to the former setting.
- If the electrical power supply to your microwave oven is interrupted, the display will intermittently show "0:00" - after the power is reinstated. If this occurs during cooking, the programme will be erased. The time of day will also be erased.

MICROWAVE POWER LEVEL

Power Level	Press the **POWER LEVEL** key POWER LEVEL	Display (Percentage)
HIGH	x1	100P
	x2	90P
MEDIUM HIGH	x3	80P
	x4	70P
MEDIUM	x5	60P
	x6	50P
MEDIUM LOW (DEFROST)	x7	40P
	x8	30P
LOW	x9	20P
	x10	10P
	x11	0P

- Your oven has 11 power levels, as shown.
- To change the power level for cooking, press the **POWER LEVEL** key until the display indicates the desired level. Press the **START** key to start the oven.
- To check the power level during cooking, press the **POWER LEVEL** key. As long as your finger is pressing the **POWER LEVEL** key the power level will be displayed. The oven continues to count down although the display will show the power level.
- If "0P" is selected, the oven will work with the fan but no power. You can use this level to remove the odour.

Generally the following recommendations apply:

100P/ 90P - (HIGH) used for fast cooking or reheating e.g. for casseroles, hot beverages, vegetables etc.

80P/ 70P - (MEDIUM HIGH) used for longer cooking of dense foods such as roast joints, meat loaf and plated meals, also for sensitive dishes such as sponge cakes. At this reduced setting, the food will cook evenly without over cooking at the sides.

60P/ 50P - (MEDIUM) for dense foods which require a long cooking time when cooked conventionally, e.g. beef casserole, it is advisable to use this power setting to ensure the meat will be tender.

40P/ 30P - (MEDIUM LOW) to defrost, select this power setting, to ensure that the dish defrosts evenly. This setting is also ideal for simmering rice, pasta, dumplings and cooking egg custard.

20P/ 10P - (LOW) For gentle defrosting, e.g. cream or pastry.

MANUAL OPERATION

Opening the door:
To open the oven door, push the door opening button.

Starting the oven:

Prepare and place food in a suitable container onto the turntable or place directly onto the turntable. Close the door and press the **START/AUTO MINUTE** key after selecting the desired cooking mode.
Once the cooking programme has been set and the **START/AUTO MINUTE** key is not pressed in 1 minute, the setting will be cancelled.
The **START/AUTO MINUTE** key must be pressed to continue cooking if the door is opened during cooking. The audible signal sounds once by efficient press, inefficient press will be no response.

Use the **STOP/CLEAR** key to:
1. Erase a mistake during programming.
2. Stop the oven temporarily during cooking.
3. Cancel a programme during cooking, press the **STOP/CLEAR** key twice.
4. To set and to cancel the child lock (refer to page 8).

MICROWAVE COOKING

Your oven can be programmed for up 99 minutes 50 seconds (99.50).

MANUAL COOKING/ MANUAL DEFROSTING
- Enter the cooking time and use microwave power levels 100P to 10P to cook or defrost (refer to page 5).
- Stir or turn the food, where possible, 2 - 3 times during cooking.
- After cooking, cover the food and leave to stand, where recommended.
- After defrosting, cover the food in foil and leave to stand until thoroughly defrosted.

Example:
To cook 2 minutes and 30 seconds on 70% microwave power.

1. Input the power level by pressing the **POWER LEVEL** key 4 times for 70 P.

2. Enter the cooking time by pressing the **1 min.** key twice and then the **10 sec.** key 3 times.

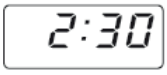

3. Press the **START/AUTO MINUTE** key to start the timer.
(The display will count down through the set cooking/defrosting time.)

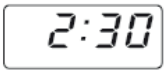

NOTE:
- When the oven starts, the oven lamp will light and the turntable will rotate clockwise or anticlockwise.
- If the door is opened during cooking/defrosting to stir or to turn over food, the cooking time on the display stops automatically. The cooking/ defrosting time starts to count down again when the door is closed and the **START/AUTO MINUTE** key is pressed.
- When cooking/defrosting is complete, open the door or press **STOP/CLEAR** key and the time of day will reappear on the display, if the clock has been set.
- If you wish to know the power level during cooking, press the **POWER LEVEL** key. As long as your finger is touching the **POWER LEVEL** key, the power level will be displayed.

IMPORTANT:
- Close the door after cooking / defrosting. Please note that the light will remain on when the door is open, this is for safety reasons to remind you to close the door.
- If you cook the food over the standard time with only 100P, the power of the oven will lower automatically to avoid overheating. (The microwave power level will be reduced).

Cooking Mode	Standard time
Microwave 100P	30 minutes

AUTO MENU OPERATION

The **AUTO MENU** keys automatically work out the correct cooking mode and cooking of the foods (details on auto menu chart guide below). Follow the example below for details on how to operate this function.

Example: To cook two jacket potatoes (0.46kg) by using the AUTO MENU function.

1. Select the required menu by pressing the **Jacket Potato** key once.

   JACKET POTATO **x1**,

   the display will show: 1

2. Press **WEIGHT UP/DOWN** keys or continue to press the **Jacket Potato** key to choose the required number of potatoes (up to 3).

   WEIGHT **x1**, display: 2

3. Press the **START/AUTO MINUTE** key to start cooking.
   (The display will count down through defrosting time)

NOTES:

- The weight or quantity of the food can be input by pressing the **WEIGHT UP/DOWN** keys until the desired weight/quantity is displayed. Enter the weight of the food only. Do not include the weight of the container.
- Rice & Pasta has two menu options. Select A-1 for Rice menus or press the Rice & Pasta key again to select A-2 for the Pasta menu.

AUTO MENU CHART GUIDE

Auto Menu		Weight/Portion	Procedure
Rice & Pasta	White Rice A-1	Rice: 1/2 Cup, 1 Cup, 2 Cups, 4 Cups Hot Tap Water: 2 Cups, 2 1/2 Cups, 4 Cups, 6 Cups	Wash the rice until the water runs clear. Place rice into a large microwave safe glass bowl and cover with the recommended amount of hot tap water. Cook Uncovered using Auto Menu Programme. When the oven beeps, stir the rice and press Start to resume cooking. After cooking, stand and stir.
	Dry Pasta A-2	Pasta: 1/2 Cup, 1 Cup, 2 Cups, 4 Cups Hot Tap Water: 1 1/2 Cups, 2 Cups, 4 Cups, 6 Cups	Place the pasta into a large microwave safe glass bowl and cover with the recommended amount of hot tap water. Cook Uncovered using Auto Menu Programme. When the oven beeps, stir the pasta and press Start to resume cooking. After cooking, stand and stir.
Jacket Potato		1, 2, and 3 Potatoes. 1 Potato = Approx 230g (Initial temp 20ºC)	Please use potatoes with a similar size of approximately 230g. Pierce each of the potatoes twice on each side with a fork. Place the potatoes onto the outer edge of the turntable. Turn over and rearrange halfway through cooking. Stand for 2-5 mins in foil before serving.
Chilled Pizza		1, 2 and 4 slices. 1 piece = 50g. (Initial temp 5ºC)	Place the pizza pieces onto a 25cm microwave safe plate in the centre of the turntable. Do not cover.
Frozen Vegetables		0.15kg, 0.35kg and 0.5kg. (Initial temp -18ºC)	Place vegetables in a large microwave safe glass bowl. Cover the bowl with plastic wrap and place onto the turntable. Stir halfway through cooking and after cooking.
Tea and Coffee		1, 2 and 3 Cups. 1 Cup = Approx 120ml (Initial temp 5ºC)	Use a microwave safe mug. Place the mug onto the turntable and stir after heating.
Dinner Plate		0.25kg, 0.35kg and 0.5kg. (Initial temp 5ºC)	Use a 25cm microwave safe plate. Place your dinner plate of food (such as meat, vegetable and rice/potatoes) in the centre of the turntable. Stand for 2 minutes before serving.

Notes:

- The final temperature will vary according to the initial food temperature. Check food is hot after cooking. If necessary, you can extend the cooking manually.
- The results when using auto cook depend on variances such as the shape and size of the food and your personal preference as regards cooking results. If you are not satisfied with the programmed result, please adjust the cooking time to match your requirement.

OTHER CONVENIENT FUNCTIONS

1. SEQUENCE COOKING
This function allows you to cook using up to 2 different stages which can include manual cooking time and mode and/or time defrost function. Once programmed there is no need to interfere
with the cooking operation as the oven will automatically move onto the next stage. The audible signal will sound once after the first stage. If one stage is defrosting, it should be in the first stage.

Note: Auto menu cannot be set as one of the multiple sequences.

Example: If you want to defrost the food for 5 minutes, then to cook with 80P microwave power for 7 minutes. The steps are as follows:

1. Press the **TIME DEFROST** key once, in the LED display will appear 00:00.
2. Enter the cooking time by pressing the **1 min.** key 5 times.
3. Input the power level (80P) by pressing the **POWER LEVEL** key 3 times.
4. Enter the cooking time by pressing the **1 min.** key 7 times.
5. Press the **START/AUTO MINUTE** key once to start cooking.

2. AUTO MINUTE FUNCTION
The **START/AUTO MINUTE** key allows you to operate the two following functions:

a. Direct start
You can directly start cooking on 100P microwave power level for 1 minute by pressing the **AUTO MINUTE** key.

b. Extend the cooking time
You can extend the cooking time during manual cooking, time defrost and auto menu operation in multiples of 1 minute if the **START/AUTO MINUTE** key is pressed while the oven is in operation. During the weight defrost, the cooking time cannot be increased by pressing **START/AUTO MINUTE** key.
NOTE: The cooking time may be extended to a maximum of 99 minutes 50 seconds.

3. KITCHEN TIMER FUNCTION :
You can use the kitchen timer for timing where microwave cooking is not involved for example to time boiled eggs cooked on conventional hob or to monitor the standing time for cooked/defrosted food.

Example:
To set the timer for 5 minutes.

1. Press the **KITCHEN TIMER** key once.

2. Enter the desired time by pressing the **1 min.** key 5 times.

3. Press the **START/ AUTO MINUTE** key to start the timer.

Check the display.
(The display will count down through the set cooking/ defrosting time.)

When the timer time arrives, the audible signal will sound 5 times and the LED will display the time of day.
You can enter any time up to 99 minutes 50 seconds. To cancel the KITCHEN TIMER whilst counting down, simply press the **STOP/CLEAR** key.
NOTE: The KITCHEN TIMER function cannot be used whilst cooking.

4. CHILD LOCK:
Use to prevent unsupervised operation of the oven by children.
a. To set the CHILD LOCK:
Press and hold the **STOP/CLEAR** key for 3 seconds until a long a beep sounds. The display will show:

b. To cancel the CHILD LOCK:
Press and hold the **STOP/CLEAR** key for 3 seconds until a long beep sounds.

TIME DEFROST AND EXPRESS DEFROST OPERATION

1. TIME DEFROST

This function quickly defrosts food while enabling you to choose a suitable defrost period, depending on the food type. Follow the example below for details on how to operate this function. The time range is 0:10 – 99:50.

Example: To defrost the food for 10 minutes.

1. Select the menu required by pressing the **TIME DEFROST** key once.

   TIME DEFROST **x1**, the display will show: 00:00

2. Enter the cooking time by pressing the **10 min.** key once.

   10:00

3. Press the **START/AUTO MINUTE** key to start cooking.

Notes for Time Defrost:

- After cooking the audible signal will sound five times and the LED will display the time of day, if the clock has been set. If the clock has not been set, the display will only show "0:00" when cooking is complete.
- The preset microwave power level is 30P and can not be changed.

2. EXPRESS DEFROST

The microwave oven is pre-programmed with a time and power level so that the following food is defrosted easily: Pork, beef and chicken. The weight range for this food is 0.5kg.
Follow the example below for details on how to operate these functions.

Example : To defrost 0.5kg of minced beef using EXPRESS DEFROST.
Place the meat in a shallow microwave oven safe dish or microwave safe defrost rack on the turntable.

1. Select the menu required by pressing the **EXPRESS DEFROST** key once.

   EXPRESS DEFROST **x1**,

   the display will show: 0.5

2. Press the **START/ AUTO MINUTE** key to start cooking.
   (The display will count down through defrosting time)

Frozen foods are defrosted from -18°C.

NOTES FOR DEFROST:

- Before freezing foods, ensure food is fresh and of good quality.
- If necessary, shield small areas of meat or poultry with flat pieces of aluminium foil. This will prevent areas from becoming warm during defrosting. Ensure the foil does not touch the oven walls.

DEFROSTING ADVICE

Defrosting food using your microwave oven is the quickest method of all.
It is a simple proccess but the following instructions are essential to ensure the food is thoroughly defrosted.

Rearrange	Foods that are placed towards the outside of the dish will defrost quicker than foods in the centre. It is therefore essential that the food is rearranged up to 4 times during defrosting. Move closely packed pieces from the outside to the centre and rearrange over-lapping areas. This will ensure that all parts of the food defrosts evenly.
Separate	Foods may be stuck together when removed from the freezer. It is important to separate foods as soon as it is possible during defrosting, e.g. bacon rashers, chicken fillets.
Shield	Some areas of food being defrosted may become warm. To prevent them becoming warmer and starting to cook, these areas can be shielded with small pieces of foil, which reflect microwaves, e.g. legs and wings on a chicken.
Stand	Standing time is necessary to ensure food is thoroughly defrosted. Defrosting is not complete once the food is removed from the microwave oven. Food must stand, covered, for a length of time to ensure the centre has completly defrosted.
Turn over	It is essential that all foods are turned over at least 3 - 4 times during defrosting. This is important to ensure thorough defrosting.

NOTES:
- Remove all packaging and wrapping before defrosting.
- To defrost food, use microwave power levels 30% or 10%.

For the reheating of foods, follow the advice and guidelines below to ensure food is thoroughly reheated before serving.

Plated meals	**Remove any poultry or meat portions, reheat these separately, see below.** Place smaller items of food to the centre of the plate, larger and thicker foods to the edge. Cover with vented microwave cling film and reheat on 50%, stir/rearrange halfway through reheating. **NOTE:** Ensure the food is thoroughly reheated before serving.	
Sliced meat	Cover with vented microwave cling film and reheat on 50%. Rearrange at least once to ensure even reheating. **NOTE:** Ensure the meat is thoroughly reheated before serving.	
Poultry portions	Place thickest parts of the portions to the outside of the dish, cover with vented microwave cling film and reheat on 70%. Turn over halfway through reheating. **NOTE:** Ensure the poultry is thoroughly reheated before serving.	
Casseroles	Cover with vented microwave cling film or a suitable lid and reheat on 50%. Stir frequently to ensure even reheating. **NOTE:** Ensure the food is thoroughly reheated before serving.	

To achieve the best results when reheating, select a suitable microwave power level appropriate to the type of food. e.g. A bowl of vegetables can be reheated using 100%, while a lasagne which contains ingredients that cannot be stirred, should be reheated using 50%.

NOTES:
- Remove food from foil or metal containers before reheating.
- Reheating times will be affected by the shape, depth, quantity and temperature of food together with the size, shape and material of the container.

⚠ **WARNING:**
Never heat liquids in narrow-necked containers, as this could result in the contents erupting from the container and may cause burns.

- To avoid overheating and fire, special care must be taken when reheating foods with a high sugar or fat content, e.g. mince pies or Christmas pudding.
- Never heat oil or fat for deep frying as this may lead to overheating and fire.
- Canned potatoes should not be heated in the microwave oven, follow the manufacturer's instructions on the can.

⚠ **WARNING:**
The contents of feeding bottles and baby food jars are to be stirred or shaken and the temperature is to be checked before consumption to avoid burns.

CARE AND CLEANING

Disconnect the power supply cord before cleaning or leave the door open to inactivate the oven.

CLEAN THE OVEN AT REGULAR INTERVALS - Keep the oven clean and remove any food deposits, or it could lead to deterioration of the surface. This could adversely affect the life of the appliance and possibly result in a hazardous situation.

Exterior:

The outside may be cleaned with mild soap and warm water, wipe clean with a damp cloth. Avoid the use of harsh abrasive cleaners. Keep the ventilation openings free of dust.

Door:

Wipe the door and window on both sides, the door seals and adjacent parts frequently with a damp cloth to remove any spills or spatters. Do not use abrasive cleaners.

Touch Control Panel:

Wipe the panel with a cloth dampened slightly with water only.
Do not scrub or use any sort of chemical cleaners. Avoid the use of excess water.

Interior walls:

To clean the interior surfaces, wipe with a soft cloth and warm water. After use wipe the waveguide cover in the oven with a soft damp cloth to remove any food splashes. Built-up splashes may overheat and begin to smoke or catch fire. Do not remove the waveguide cover. DO NOT USE A COMMERCIAL OVEN CLEANER, ABRASIVE OR HARSH CLEANERS AND SCOURING PADS ON ANY PART OF YOUR MICROWAVE OVEN. NEVER SPRAY OVEN CLEANERS DIRECTLY ONTO ANY PART OF YOUR OVEN.
Avoid using excess water. After cleaning the oven, ensure any water is removed with a soft cloth.

Turntable/Roller Stay:

Wash with mild soapy water and dry thoroughly.

SERVICE CALL CHECK

Please check the following before calling for service:

1. Place one cup of water (approx. 250 ml) in a glass measure in the oven and close the door securely. Press the INSTANT COOK/START pad twice.

A. Does the oven lamp come on? YES _____ NO _____

B. Does the cooling fan work? YES _____ NO _____
(Put your hand over the rear ventilation openings.)

C. Does the turntable rotate? YES _____ NO _____
(The turntable can rotate clockwise or counterclockwise. This is quite normal.)

D. After two minutes, did an audible signal sound and COOK indicator go off?
YES _____ NO _____

E. Is the water inside the oven hot? YES _____ NO _____

If "NO" is the answer to any of the above questions, please check your wall socket and the fuse in your meter box. If both the wall socket and the fuse are functioning properly, CONTACT YOUR NEAREST SERVICE CENTRE APPROVED BY SHARP.

SPECIFICATIONS

AC Line Voltage	Single phase 230–240V, 50Hz
AC Power Required	1270W
Output Power	750 W* (IEC test procedure)
Microwave Frequency	2450 MHz (Class B/Group 2)**
Outside Dimensions (W x H x D)	442 x 255 x 327mm
Turntable	255mm
Weight	10.9kg

* When tested in accordance with AS/NZS 2895.1:2007

** This is the classification of ISM (Industrial, Scientific and Medical) equipment described in the International Standard CISPR11.

DEFROST TIMES FOR MEAT, POULTRY AND BREAD

1. Remove wrapping and place frozen item on a shallow, Microwave safe plastic defrost rack. If necessary, shield thin areas with aluminum foil to prevent the item from cooking while defrosting
2. Defrost by following the steps in the “Microwave Time” column.
3. Set the microwave to 30% power.
4. When turning over, re-shield any warm areas so it continues to defrost without cooking

CUT	MICROWAVE TIME	STANDING TIME
BEEF (Roast) Steaks Minced Beef	8-10 minutes/500g 9-11 minutes/500g 11-13 minutes/500g	10 – 15 minutes 5 – 10 minutes 5 – 10 minutes
PORK (Roast) Chops Ribs Minced Pork	8-10 minutes/500g 9-11 minutes/500g 8-10 minutes/500g 11-13 minutes/500g	10 – 15 minutes 5 – 10 minutes 5 – 10 minutes 5 – 10 minutes
LAMB (Roast) Shoulder Chops	7-9 minutes/500g 7-9 minutes/500g 9-11 minutes/500g	10 – 15 minutes 10 – 15 minutes 5 – 10 minutes
POULTRY Chicken (Whole) Pieces	 8-10 minutes/500g 11-13 minutes/500g	 10 – 15 minutes 5 – 10 minutes

BREAD / PIES	MICROWAVE TIME	PROCEDURE
2 Slices of Bread	50 seconds	Place between paper towel and place directly on the turntable.
4 Slices of Bread	1 minute 30 seconds	
1 Bread Roll	1 minute 30 seconds	
2 Bread Rolls	3 minutes	

FRESH VEGETABLE CHART

1. Cover required dishes with plastic wrap or a lid.
2. Drain any remaining water after standing before serving.

Vegetable	Amount	Microwave Time at 100%	Cooking Procedure
Asparagus (halved)	500g	4-6 minutes	Place in a shallow microwave safe dish. Cover. Stand for 3 minutes
Beans (top and tailed)	500g	5-7 minutes	Place in a shallow casserole dish with 1 tablespoon of water. Cover. Stand for 3 minutes
Broccoli (uniform florets)	500g	7-9 minutes	Place in a shallow casserole dish. Cover. Stand for 3 minutes
Brussels Sprouts	500g	6-8 minutes	Place in a shallow casserole dish. Cover. Stand for 3 minutes
Cabbage (shredded)	500g	6-8 minutes	Place in a shallow casserole dish with 2 tablespoons of water. Cover. Stand for 3 minutes
Carrots (sliced)	500g	8-10 minutes	Place in a shallow microwave safe dish. Cover. Stand for 3 minutes
Cauliflower (uniform florets)	500g	8-10 minutes	Place in a shallow casserole dish with 1 tablespoon of water. Cover. Stand for 3 minutes
Corn on the Cob	2 whole cobs, each cut into quarters	8-10 minutes	Rinse corn under cold water and remove the silk and husk. Cut into quarters. Place all 8 pieces of corn into a shallow casserole dish. Cover. Stand for 3 minutes.
Mushrooms (quartered)	500g	6-8 minutes	Place in a shallow casserole dish with 2 tablespoons of butter. Cover. Stand for 3 minutes
Peas (green; top and tailed)	500g	5-7 minutes	Place in a shallow casserole dish with 1 tablespoon of water and 1 teaspoon of sugar. Cover. Stand for 3 minutes
Potatoes – Jacket	3 Large (230g each)	12-14 minutes	Pierce with a fork. Turn over during cooking. Stand for 3 minutes.
Potatoes – Baked	4 small	7-9 minutes	Peel and quarter potatoes. Cook in a dish with ⅓ cup water. Cook covered. Stand for 3 minutes.
Pumpkin (2cm cubes)	500g	7-9 minutes	Place in a shallow casserole dish. Cover. Stand for 3 minutes
Spinach (shredded)	500g	7-9 minutes	Place in a shallow casserole dish with 2 tablespoons of water. Cover. Stand for 3 minutes
Snow Peas (top and tailed)	250g	2-3 minutes	Place in a shallow casserole dish with 1 tablespoon of water. Cover. Stand for 3 minutes (cook for longer for less crunch)
Squash (whole)	500g	5-7 minutes	Pierce with a fork. Place in a shallow casserole dish. Cover. Stand for 3 minutes
Sweet Potato (2cm cubes)	500g	9-11 minutes	Place in a shallow casserole dish. Cover. Stand for 5 minutes
Zucchini (sliced or quartered)	500g	5-7 minutes	Place in a shallow casserole dish with 1 tablespoon of water and 1 tablespoon of butter. Cover. Stand for 3 minutes

FROZEN VEGETABLE CHART

1. Place vegetables in a medium/large microwave safe bowl and cover with plastic wrap.
2. Halfway through cooking, stir the vegetables to ensure even cooking.
3. Allow to stand for 2 minutes before draining any water and serving.

Vegetable	Weight	Microwave Time (100%)	Special Procedures
Beans (green, cut)	500g	10-12 minutes	
Broccoli	500g	10-12 minutes	Break apart as soon as possible. Arrange with flower towards the centre.
Carrots (whole)	500g	10-12 minutes	Stir halfway through.
Cauliflower	500g	11-12 minutes	Break apart as soon as possible. Arrange with flower towards the centre.
Corn on the Cob	4 pieces	10-11 minutes	
Peas (green)	500g	9-10 minutes	
Spinach	250g	7-9 minutes	Break apart as soon as possible.
Mixed Vegetables (i.e. carrots, beans and corn kernels)	500g	10-12 minutes	Break apart as soon as possible.

RICE AND PASTA COOKING CHART

1. Wash and strain rice before measuring amounts.
2. Place rice/pasta in a medium/large microwave safe bowl with water. Cook uncovered, stirring halfway through cooking. Allow to stand for 2 minutes before straining any remaining water and serving.

Food		Other Ingredients	Cooking Time
Pasta	1 Cup	2 cups Hot Water	16-18 minutes
	2 Cups	4 cups Hot Water	18-20 minutes
	4 Cups	6 cups Hot Water	22-24 minutes
White Rice	1 Cup	2 ½ cups Hot Water	20-22 minutes
	2 Cups	4 cups Hot Water	22-24 minutes
	4 Cups	6 cups Hot Water	26-28 minutes
Quick Oats	1 Cup	2 ¼ cups Milk	9-10 minutes

SCRAMBLED EGG GUIDE

Place butter, eggs and milk in a small/medium microwave safe bowl. Beat with a fork until well combined and yolks of eggs are completely stirred in. Cook uncovered, stirring halfway through cooking.

Egg(s)	Butter	Milk	Cooking Medium High (70%)
1	1 tsp	1 tbsp	2 minutes
2	2 tsp	1 tbsp	3 minutes
3	1 tbsp	2 tbsp	4 minutes
4	1 tbsp	¼ cup	5 minutes 30 seconds

REHEATING/DEFROSTING CONVENIENCE - FOOD CHART

FOOD	WEIGHT	COOKING TIME AND POWEL LEVEL	SPECIAL INSTRUCTIONS	STANDING TIME
Beverage (room temp.) 250mL per cup	1 cup 2 cups	1-1 ½ minutes on HIGH (100%) 2-2 ½ minutes on HIGH (100%)	Stir after heating.	_
Canned Food (room temp.) (e.g. Spaghetti, Baked Beans)	1 cup 2 cups	3 ½ minutes on MEDIUM (50%) 8 ½ minutes on MEDIUM (50%)	Place food in bowl. Cover with plastic wrap and pierce 5 times with a skewer. Stir halfway.	1-3 minutes
Canned Soup (room temp) 250mL per cup (thin soup)	1 cup 2 cups	1 ½ - 2 minutes on HIGH (100%) 4 minutes on HIGH (100%)	Place food in bowl. Cover with plastic wrap or lid. Stir halfway.	_
Meat Pie (refrigerated) Individual 180g each	1 pie 4 pies	6 minutes on MEDIUM (50%) 12 minutes on MEDIUM (50%)	Place directly on turntable, face side down. Cover with paper towel. Turn over halfway.	3 minutes
Frozen Rice/Pasta Dinners (e.g. Lasange, Risotto)	300-500g	8-10 minutes on HIGH (100%)	Remove from foil container. Cover with plastic wrap or lid. Allow to stand	2 minutes
Dinner Plate (refrigerated) 350g-400g per serve	1 serve	4-5 minutes on HIGH (100%)	Slice potato. Cover plate with plastic wrap and pierce 5 times with a skewer. Place directly on turntable. Allow to stand.	5 minutes
Casserole (refrigerated) 250g per serve	1 serve 2 serves	5 minutes on HIGH (100%) 8 minutes on HIGH (100%)	Place in a bowl, cover with plastic wrap. Place directly on turntable. Stir halfway. Allow to stand, then stir.	1-3 minutes
Croissants (frozen)	1 2	1 ½ minutes on MEDIUM LOW (30%) 2 minutes on MEDIUM LOW (30%)	Place between paper towels. Place directly on the turntable.	_
Fruit Pie individual (frozen) 135g each	1 2	5 minutes on MEDIUM LOW (30%) 7 minutes on MEDIUM LOW (30%)	Remove from foil container. Place on a plate and then onto the turntable. Allow to stand.	2 minutes
Danish Pastry whole (frozen)	400g	6 minutes on MEDIUM HIGH (70%) followed by 6 ½ minutes on MEDIUM LOW (30%)	Remove from foil container. Place on dinner plate. Allow to stand.	2 minutes

NOTE: Room Temperature +20ºC
Refrigerator Temperature +3ºC
Frozen Temperature -18ºC

COOKING AND UTENSIL GUIDE

Utensil	Use	Advice
GLASSWARE/CERAMIC (HEAT RESISTANT)	YES	GLASSWARE • Ordinary glass is not suitable for cooking but may be used for short periods for heating foods. CERAMIC • Most ovenproof china, and ceramics, are suited. • Avoid dishes that are decorated with gold or silver leaf. • Avoid using antique pottery. • If unsure, check with the manufacturer.
METAL COOKWARE	NO	• Metal cookware should be avoided when cooking in the microwave oven. • Microwave energy is reflected by metal.
PLASTIC WRAP/ OVEN BAGS (MICROWAVE SAFE ONLY)	YES	• Plastic wrap can be used to cover food. • Some shrinkage of the wrap may occur, over an extended cooking time. • When removing wrap, lift it in such a way to avoid steam burns. • Do not tie oven bags with metal twist ties, substitute with string. • For cooking food with high fat content, do not bring the wrap in contact with the food as it may melt.
ALUMINIUM FOIL	FOR SHIELDING	• Small amounts may be used to shield certain parts of meat and fish when cooking or defrosting. • Remove food in foil trays, if possible, and place in a microwave safe dish. • If not possible, place the foil tray onto a heat proof plate allowing 2.5 cm between the walls of the oven.
STRAW AND WOOD	NO	• Excessive over heating of these materials may cause a fire in the microwave oven.
PAPER	YES	• Paper towels and waxed paper are suitable to use to prevent splatters. • These are suitable for use when reheating foods or for short cooking times.
PLASTIC COOKWARE MICROWAVE SAFE	YES	• Ideal for cooking, reheating and defrosting. • Some microwave safe plastic cookware are not suitable for cooking foods with high fat and sugar content.
BROWNING DISH	YES	• Ensure that the preheating time of the dish is not exceeded. • Ensure that a microwave heat proof dinner plate or suitable insulator be placed between the turntable and the browning dish.
THERMOMETERS • MICROWAVE SAFE • CONVENTIONAL	 YES NO	

HELPFUL HINTS

1. THE ARRANGEMENT
   Arrange foods carefully. Place thickest areas toward outside of dish.

3. COVERING
   Cover foods in the microwave if you would normally cover the food in your ordinary oven, or to retain moisture. Cover foods such as Vegetables, Casseroles, or when Reheating.
   Use to cover foods:

LID

PLASTIC WRAP

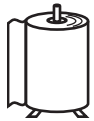
PAPER TOWEL

5. SHIELDING
   Shield using small pieces of aluminium foil to shield thin areas of meat, fish and poultry or edges of cakes to prevent overcooking.

FISH

CHICKEN

7. STIRRING
   Stir foods from the outside to the centre of the dish, once or twice during cooking if possible.
   Eg. Casseroles and Sauces.

9. DENSITY
   The depth to which microwaves penetrate food varies depending on the food's density. Porous foods like minced beef or mashed potatoes microwave faster than dense ones like steak or whole potatoes.

11. STARTING TEMPERATURE
    Frozen or refrigerated foods take longer to heat than food at room temperature. Cooking times in this book are based on normal storage temperatures. Since rooms, refrigerators and freezers differ in temperature, check cooking result at the minimum time.

13. CONDENSATION
    Condensation is a normal part of microwave cooking. The humidity and moisture in food will influence the amount of condensation in the oven. Generally, covered foods will not cause as much condensation as uncovered foods. Ensure that the ventilation openings are not blocked.

2. TURNING
   Foods such as poultry and joints of meat should be turned over after half the cooking time.

4. PIERCING
   Pierce potatoes, eggs, tomatoes or any foods with a skin or membrane to allow steam to escape.

TOMATO

EGG

6. STANDING TIME
   Standing time is important. After cooking or defrosting ensure adequate standing time. This allows the food to continue cooking or heating. Refer to cooking guides for each menu or according to manufacturers instructions.

8. SIZE
   Small pieces cook faster than large ones. To speed up cooking, cut pieces smaller than 5 cm so microwaves can penetrate to the centre from all sides. For even cooking, make all the pieces the same size.

10. FAT AND BONE
    Marbling within meat, or a thin, even layer of fat on a roast, speeds cooking. Large fatty areas or excess drippings in dish attract energy away from meat, and slows cooking. Centre bones do not affect cooking, but bone on the side of meat conducts heat to the areas next to it.

12. QUANTITY
    Microwave cooking times are directly related to the amount of food in the oven. Because energy is absorbed by the food itself, one potato or a single piece of chicken cooks rapidly. When the energy is divided among several items, cooking takes more time.

14. GENERAL
    Your microwave oven is capable of heating food and beverages very quickly therefore, it is very important that you select the appropriate cooking time and power level for the type and quantity of food to be heated. If you are unsure of the cooking time and power level required, begin with low cooking times and power levels until the food is sufficiently heated evenly throughout.

FEATURE	QUICK OPERATION GUIDE
Manual Microwave Cooking	To cook 2 minutes and 30 seconds on 70% microwave power. POWER LEVEL x4 ⇨ 1min. x2 10sec. x3 ⇨ START AUTO MINUTE
Direct Start	To start cooking on 100% microwave power for one minute START AUTO MINUTE x1
Auto Menu	To cook 2 x Jacket Potatoes JACKET POTATO x1 ⇨ + x1 (weight up) ⇨ START AUTO MINUTE
Express Defrost	To defrost 0.5kg of minced meat EXPRESS DEFROST x1 ⇨ START AUTO MINUTE
Time Defrost	To defrost at 30% microwave power for 5 minutes TIME DEFROST x1 ⇨ 1min. x5 ⇨ START AUTO MINUTE
Sequence Cooking	To cook at 70% microwave power for 2 minutes, then 30% microwave power for 5 minutes POWER LEVEL x1 ⇨ 1min. x2 ⇨ POWER LEVEL x1 ⇨ 1min. x5 ⇨ START AUTO MINUTE
Setting the Clock	24 hour clock mode. To set the time to 8:18am SET CLOCK x1 ⇨ 10min. x8 1min. x1 10sec. x8 ⇨ SET CLOCK
Kitchen Timer	To set the timer for 5 minutes KITCHEN TIMER x1 ⇨ 1min. x5 ⇨ START AUTO MINUTE
Child Lock	To set the child lock STOP CLEAR Press and hold this key for 3 seconds until a long beep sounds
	To cancel the child lock STOP CLEAR Press and hold this key for 3 seconds until a long beep sounds

SHARP

PN.:16170000A79081