SHARP

R-350E(W)
R-395E(ST) / R-395E(BS)

Microwave Oven

OPERATION MANUAL WITH COOKING GUIDE

Read all instructions carefully before using the oven

SHARP

WARRANTY

Congratulations on Your Purchase!

This Sharp Microwave Oven is warranted against faults in material and manufacture for 24 month period.

If service is required during the warranty period, please contact your nearest Sharp Approved Service Centre. These repairs would be carried out at no charge to the owner, subject to the conditions specified herein.

This warranty applies to normal domestic household use only.

This warranty does not extend to defects or injuries caused by or resulting from causes not attributable to faulty parts or the manufacture of the product, including but not limited to, defect or injury caused by or resulting from misuse, abuse, neglect, lack of maintenance, accidental damage, improper voltage, liquid spillage, vermin infestation, software, or any alterations made to the product which are not authorised by Sharp.

Please retain your sales documentation, as this should be produced to validate a warranty claim. This warranty is in addition to and in no way limits, varies or excludes any implied rights and remedies under any relevant legislation in the country of sale.

This warranty does not cover transportation to and from the Sharp Approved Service Centre. Goods presented for repair may be replaced by refurbished goods of the same type rather than being repaired. Refurbished parts may be used to repair the goods. The repair of your goods may result in the loss of user generated data, please ensure that you have saved this data elsewhere prior to repair.

SHARP

FOR PRODUCTS PURCHASED IN

NEW ZEALAND

CONTACT YOUR SELLING DEALER/RETAILER

OR CALL

SHARP CUSTOMER CARE

0800 501 201

https://www.sharp.net.nz/contact

SHARP CORPORATION OF NEW ZEALAND LIMITED

IMPORTANT NOTICE: This warranty applies only to products sold in New Zealand

INTRODUCTION

SHARP®

Thank you for buying a Sharp Microwave Oven.
Please keep this operation manual handy, as it describes all the features of your oven and will enable you to cook a variety of foods.

The manual is divided into two sections:

1. OPERATION (P2~P19)
   This section describes your oven and teaches you how to use all the features.

2. SMART COOKING GUIDE
   This section is at the back of the manual, it contains the more commonly used information such as how to prepare food, which cooking utensil to use and standing times.
   It also contains recipes for manual cooking.

Please take some time to read your operation manual carefully, the automatic cooking menus programmed into your new oven have been carefully developed to give optimum results when the step by step instructions are followed.

When selecting another home appliance, please again consider our full range of Sharp products.

CONTENTS

	page
Warranty	Inside of front cover
Introduction	1
Important Safety Instructions	2,3
Special Notes and Warnings	4
Installation Instructions	5
Oven Diagram	5
Operation of Touch Control Panel	6
Control Panel Display	6
Touch Control Panel Layout	6
Before Operating	7
Getting Started	7
Clock Setting	7
Stop/Clear	7
Manual Operations	8
Microwave Time Cooking	8
Sequence Cooking	10
START +30SEC.	11
Increasing Time During a Cooking Program	11
Notes for Automatic Operations	12
Smart Sensor Cook	13
Smart Convenience Menu	14
Smart Defrost Menu	15
Set Timer	16
Favourite	17
Child Lock	18
Care and Cleaning	19
Service Call Check	19
Specifications	19
Smart Cooking Guide	①-㉕
Quick Reference Guide	See last page

IMPORTANT SAFETY INSTRUCTIONS

IMPORTANT SAFETY INSTRUCTIONS : READ CAREFULLY AND KEEP FOR FUTURE REFERENCE.

1. This oven is designed to be used on a benchtop, on a shelf or built-in with a Sharp built-in kit. We do not recommend installing the oven under the benchtop or any other appliances. The appliance must not be placed in a cupboard. See page 5 for the installation. Place or mount the oven so that the bottom of the oven is 85 cm or more above the floor.
2. Ensure there is a minimum of free space above the oven of 15 cm. See page 5 for the other necessary spaces.
3. This appliance is intended for use in normal domestic applications including small kitchens in offices, hotel rooms and other small residential environments. It is not suitable for commercial or laboratory use.
4. The microwave oven is intended for heating food and beverages. Drying of food or clothing and heating of warming pads, therapeutic devices (eg. wheat bags), slippers, sponges, damp cloth and similar may lead to risk of injury, ignition or fire.
5. This appliance is not intended for use by persons (including children) with reduced physical, sensory or mental capabilities, or lack of experience and knowledge, unless they have been given supervision or instruction concerning use of the appliance by a person responsible for their safety.
6. Children should be supervised to ensure that they do not play with the appliance.
7. **WARNING:** Only allow children to use the oven without supervision when adequate instructions have been given so that the child is able to use the oven in a safe way and understands the hazards of improper use.
8. **WARNING:** If the door or door seals are damaged, the oven must not be operated until it has been repaired by an authorised SHARP service agent or microwave technician.
9. **WARNING:** Never adjust, repair or modify the oven yourself. It is hazardous for anyone other than an authorised SHARP service agent or microwave technician to carry out any service or repair operation which involves the removal of a cover which gives protection against exposure to microwave energy.
10. If the power supply cord of this appliance is damaged, it must be replaced by a service centre approved by SHARP in order to avoid a hazard.
11. **WARNING:** Liquids and other foods must not be heated in sealed containers since they are liable to explode.
12. Microwave heating of beverages can result in delayed eruptive boiling, therefore care must be taken when handling the container.
13. Eggs in their shell and whole hard-boiled eggs should not be heated on microwave modes since they may explode, even after microwave heating has ended. To cook or reheat eggs which have not been scrambled or mixed, pierce the yolks and the whites, or the eggs may explode. Shell and slice hard boiled eggs before reheating them in the microwave oven.
14. Utensils should be checked to ensure that they are suitable for use in the oven. See Page ②. Use only microwave safe containers and utensils on microwave modes.
15. Metallic containers for food and beverages are not allowed during microwave modes.
16. The contents of feeding bottles and baby food jars must be stirred or shaken and the temperature checked before consumption, in order to avoid burns.
17. When heating food in plastic or paper containers, keep an eye on the oven due to the possibility of ignition.
18. If smoke is observed, switch off or unplug the appliance and keep the door closed in order to stifle any flames.
19. The oven should be cleaned regularly and any food deposits removed.
20. Cleaning and user maintenance shall not be performed by children without supervision.
21. Failure to maintain the oven in a clean condition, particularly the inside of the door, cavity and waveguide cover could cause damage and adversely affect the life of the appliance and possibly result in a hazardous situation. This type of damage can void the warranty of the oven.
22. The appliance must not be cleaned with a steam cleaner.
23. See instructions for cleaning door seals, cavities and adjacent parts on page 19.
24. Handle with care when removing items from the oven so that the turntable does not displace.

Other warnings

1. To reduce the risk of fire in the oven cavity:
   a. Do not overcook food.
   b. Remove wire twist-ties from paper or plastic bags before placing bag in the oven.
   c. Do not heat oil or fat for deep frying. The temperature of the oil cannot be controlled.
2. To reduce the risk of an explosion or delayed eruptive boiling, care should be taken when handling the container. Your oven is capable of heating food and beverages very quickly with microwaves, therefore it is very important that you select the appropriate cooking time and power level for the type and quantity of food to be heated. If you are unsure of the cooking time and power level required, begin with low cooking times and power levels until the food is sufficiently heated evenly throughout.
   Additionally:
   a. Do not place sealed containers in the oven. Baby bottles fitted with a screw cap or teat are considered to be sealed containers.
   b. Do not use excessive amounts of time.
   c. When boiling liquids in the oven, use a wide-mouthed container.
   d. Stand at least for 20 seconds at the end of cooking to avoid delayed eruptive boiling of liquids.
   e. Stir the liquid before and during cooking. Use extreme care when handling the container or inserting a spoon or other utensil into the container.
3. Never operate the oven whilst any object is caught or jammed between the door and the oven.
4. Handle with care when removing items from the oven so that the utensil, your clothes or accessories do not touch the latches.
5. Never poke an object, particularly a metal object, through a grille or between the door and the oven while the oven is operating.
6. Never tamper with or deactivate the door safety latches.
7. Always use oven gloves to prevent burns when handling utensils that are in contact with hot food. Enough heat from the food can transfer through utensils to cause skin burns.
8. If the oven lamp fails please consult your dealer or a qualified service technician trained by SHARP.
9. Avoid steam burns by directing steam away from the face and hands. Slowly lift the furthest edge of a dish's cover including microwave plastic wrap etc., and carefully open popcorn and oven cooking bags away from the face.
10. Make sure that the power supply cord is undamaged, and that it does not run under the oven or over any hot surfaces or sharp edges.
11. To prevent the turntable from breaking:
    a. Before cleaning the turntable with water, leave the turntable to cool.
    b. Do not place anything hot on a cold turntable.
    c. Do not place anything cold on a hot turntable.
12. Do not place anything on the outer cabinet.
13. Do not store food or any other items inside the oven.
14. Make sure the utensil does not touch the interior walls during cooking.

Information on Disposal

This product should not be disposed of in a general waste bin as it contains materials that should be recycled, which is good for the environment.
If you are in doubt about the correct disposal method, contact your local council.

SPECIAL NOTES AND WARNINGS

	DO	DON'T
Eggs, fruits, nuts, seeds, vegetables, sausages and oysters	* Puncture egg yolks and whites and oysters before cooking to prevent "explosion". * Pierce skins of potatoes, apples, squash, hot dogs, sausages and oysters so that steam escapes.	* Cook eggs in shells. This can cause the egg to "explode", which may damage the oven or cause injury to yourself. * Cook hard/soft boiled eggs. * Overcook oysters. * Dry nuts or seeds in shells.
Popcorn	* Use specially bagged popcorn for the microwave oven. * Listen while popping corn for the popping to slow to 1-2 seconds.	* Pop popcorn in regular brown bags or microwave safe glass bowls. * Exceed maximum time on popcorn package.
Baby food	* Transfer baby food to small dish and heat carefully, stirring often. Check for suitable temperature to prevent burns. * Remove the screw cap and teat before warming baby bottles. After warming shake thoroughly. Check for suitable temperature.	* Heat disposable bottles. * Overheat baby bottles. Only heat until warm. * Heat bottles with teats on. * Heat baby food in original jars.
General	* Food with filling should be cut after heating, to release steam and avoid burns. * Use a deep microwave safe glass bowl when cooking liquids or cereals to prevent boiling over.	* Heat or cook in closed glass jars or air tight containers. * Deep fry fat. * Heat or dry wood, herbs, wet papers, clothes or flowers. * Operate the oven without a load (i.e. an absorbing material such as food or water) in the oven cavity.
Liquids (Beverages)	* For boiling or cooking liquids see IMPORTANT SAFETY INSTRUCTIONS on page 2 to prevent explosion and delayed eruptive boiling.	* Heat for longer than recommended time. See REHEATING-FOOD CHART on page 22.
Canned foods	* Remove food from can.	* Heat or cook food while in cans.
Sausage rolls, pies, Christmas pudding	* Cook for the recommended time. (These foods have high sugar and/or fat contents.)	* Overcook as they may catch fire.
Meats	* Use a microwave proof roasting rack to collect drained juices.	* Place meat directly on the turntable for cooking.
Utensils	* Check the utensils are suitable for MICROWAVE cooking before you use them.	* Use metal utensils for MICROWAVE cooking. Metal reflects microwave energy and may cause an electrical discharge known as arcing.
Aluminium foil	* Use to shield food to prevent over cooking. * Watch for sparking. Reduce foil or keep clear of cavity walls.	* Use too much. * Shield food close to cavity walls. Sparking can damage the cavity.
Browning dish	* Place a suitable insulator such as a microwave and heat proof dinner plate between the turntable and the browning dish.	* Exceed the preheating time recommended by the manufacturer. Excessive preheating can cause the glass turntable to shatter and/or damage internal parts of the oven.

INSTALLATION INSTRUCTIONS

1. Remove all packing materials from the oven cavity, **(do not remove the waveguide cover)**, and the feature sticker from the outside of the door, if there is one. Check the unit for any damage, such as a misaligned door, damaged door seals around the door or dents inside the oven cavity or on the door. If there is any damage, please do not operate the oven until it has been checked by a SERVICE CENTRE APPROVED BY SHARP and repaired, if necessary.
2. Accessories provided
   1) Turntable 2) Roller stay 3) Operation manual and Cook book
3. Place the roller stay in the coupling on the oven floor, then place the turntable on to the roller stay, ensuring it is located firmly. Refer to OVEN DIAGRAM below. NEVER operate the oven without the roller stay and turntable.
4. This oven is designed to be used on a benchtop, on a shelf or built-in. The appliance must not be placed in a cupboard. It should not be installed in any area where heat and steam are generated, for example, next to a conventional oven unit. The oven should be installed so as not to block ventilation openings.
   When the oven is mounted on a kitchen benchtop, allow a space of at least 15cm on the top, 10cm on both sides and 5cm at the rear of the oven for adequate air circulation. When installing on a shelf, the minimum dimension of the shelf should be 720mm(W) x 465mm(H) x 460mm(D).
   Do not build-in the appliance under the benchtop or any other appliances.
   If the oven is to be positioned near a conventional oven, ensure that adequate space is allowed, and a suitable heat shield is incorporated between the two to prevent damage to the oven .
   WARNING: The electrical outlet must be readily accessible so that the unit can be unplugged easily in an emergency.
5. Neither the manufacturer nor the distributors can accept any liability for damage to the machine or personal injury for failure to observe the correct electrical connecting procedure.
   The A.C. voltage must be single phase 230 – 240V, 50Hz.
6. This appliance must be earthed.
7. Operate the oven from a general purpose domestic outlet.
   If a generator is used, do not operate the oven with non-sinusoidal outputs.

OVEN DIAGRAM

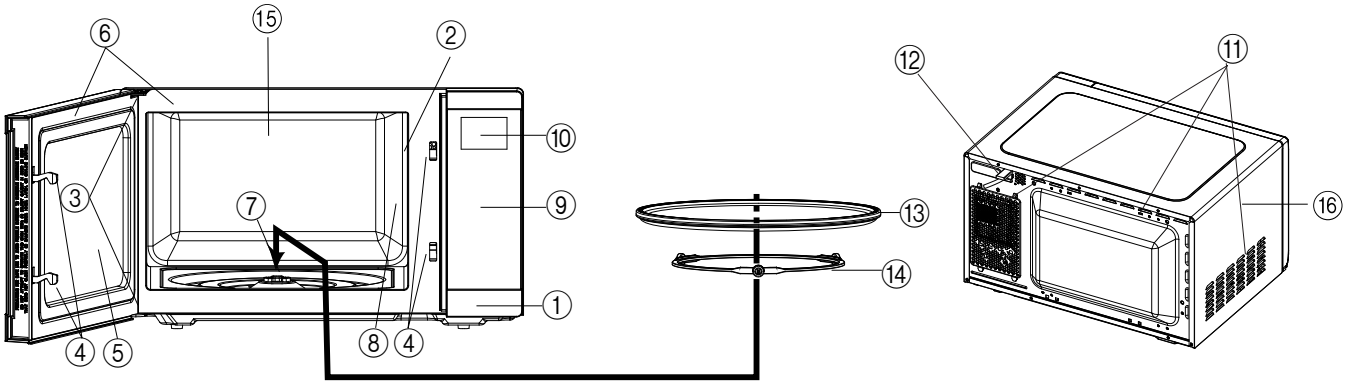

1. Door open button
2. Oven lamp
3. Door hinges
4. Door safety latches
5. See through door
6. Door seals and sealing surfaces
7. Coupling
8. Waveguide cover (Do not remove)
9. Control panel (See page 6)
10. LED Display
11. Ventilation openings
12. Power supply cord
13. Turntable
14. Roller stay
15. Oven Cavity
16. Outer cabinet

OPERATION OF TOUCH CONTROL PANEL

The operation of the oven is controlled by pressing the appropriate pads arranged on the surface of the control panel.

An entry signal tone should be heard each time you press the control panel to make a correct entry.

In addition an audible signal will sound for approximately 2 seconds at the end of the cooking cycle, or 4 times when cooking procedure is required.

Control Panel Display

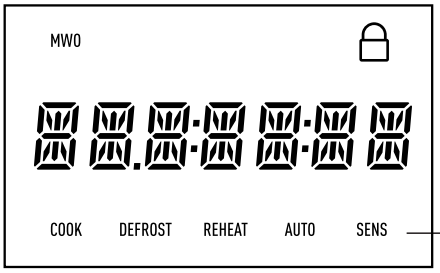

Touch Control Panel Layout

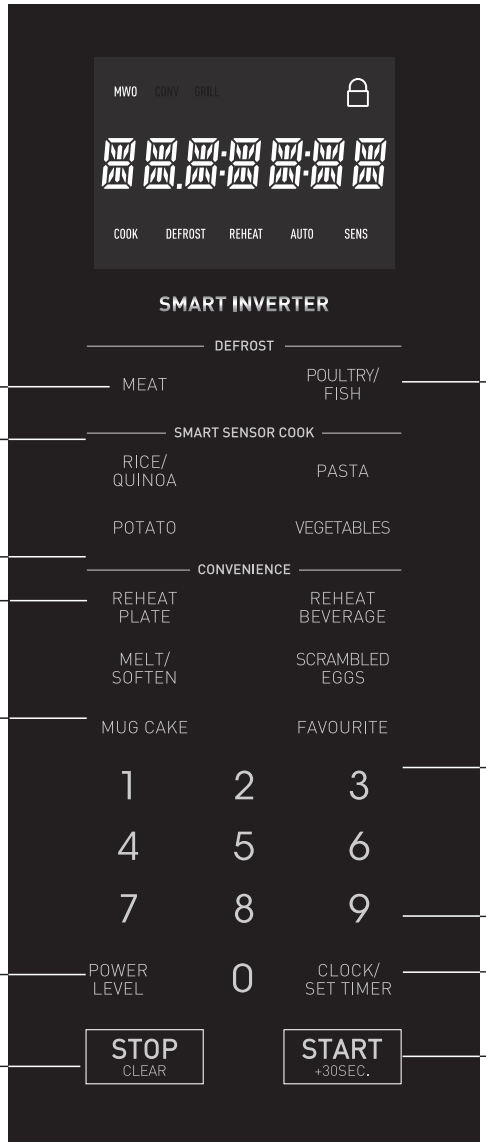

BEFORE OPERATING

Getting Started

Step	Procedure	Pad Order	Display
1	Plug the oven into a power point and switch on the power. Ensure the oven door is closed.		MICRO- WAVE OVEN
2	Press the STOP/CLEAR pad.	STOP CLEAR	0

Clock Setting

* To enter the present time of day 11:34 (AM or PM).

Step	Procedure	Pad Order	Display
1	Press the CLOCK/SET TIMER pad once.	CLOCK/ SET TIMER x 1	CLOCK PRESS START
2	Press the START/+30SEC. pad.	START +30SEC.	ENTER TIME PRESS START TO SET
3	Enter the correct time of day by pressing the numbers in sequence.	1 1 3 4	11:34 The dots (:) will flash on and off.
4	Press the START/+30SEC. pad.	START +30SEC.	11:34

This is a 12 hour clock. If you attempt to enter an incorrect clock time (eg. 13:45), ENTER TIME PRESS START TO SET will appear in the display. Press the STOP/CLEAR pad and re-enter the time of day (eg. 1:45).

Stop/Clear

Press the STOP/CLEAR pad once to:
1. Stop the oven temporarily during cooking.
2. Clear if you make a mistake during programming.

MANUAL OPERATIONS

Microwave Time Cooking

This is a manual cooking feature, first enter the cooking time then the power level.
There are eleven different power levels. You can program up to 99 minutes, 99 seconds.
This variable cooking control allows you to select the rate of microwave cooking.
After cooking, the fan will continue to operate. COOLING may be displayed when the door is opened or STOP/ CLEAR pad is pressed while fan is operating.

Display	Power level		Examples
1200 W	100%	High	Raw meat, Vegetables, Rice or Pasta
1100 W	90%		
1000 W	80%		
900 W	70%	Medium High	Delicate Food such as Eggs or Seafood.
800 W	60%		
700 W	50%	Medium	
500 W	40%		
400 W	30%	Medium Low	Defrost, Softening butter
220 W	20%		
100 W	10%	Low	Keep food warm
0 W	0%		

If a power level is not selected, then 1200W power is automatically used.
* Suppose you want to cook for 2 minutes 30 seconds on 1200W power.

Step	Procedure	Pad Order	Display
1	Enter desired cooking time.	2 3 O	MWO 02:30
2	Press the START/+30SEC. pad.	START +30SEC.	MWO 2:30 COOK The timer begins to count down.

MANUAL OPERATIONS

To lower the power press the POWER LEVEL pad until desired power level is displayed.
* Suppose you want to cook Fish Fillets for 10 minutes on 700W power.

Step	Procedure	Pad Order	Display
1	Select power level by pressing the POWER LEVEL pad as required (for 700W press six times).	POWER LEVEL x 6	700 W / PRESS / AGAIN / TO / LOWER / POWER / OR PUSH / START
2	Press the START/+30SEC. pad.	START +30SEC.	ENTER / TIME / PRESS / START
3	Enter desired cooking time.	1 0 0 0	10:00
4	Press the START/+30SEC. pad.	START +30SEC.	10:00 COOK The timer begins to count down.

If the door is opened during a cooking process, the cooking time on the display automatically stops. The cooking time starts to count down again when the door is closed and the START/+30SEC. pad is pressed.

Sequence Cooking

Your oven can be programmed with up to 2 automatic cooking sequences, automatically switching from one variable power setting to the next.
* Suppose you want to cook for 10 minutes on 700W followed by 3 minutes on 1200W.

Step	Procedure	Pad Order	Display
1	Select desired power level by pressing the POWER LEVEL pad (for 700W press six times).	POWER LEVEL x 6	700 W / PRESS / AGAIN / TO / LOWER / POWER / OR PUSH / START
2	Press the START/+30SEC. pad.	START +30SEC.	ENTER / TIME / PRESS / START
3	Enter desired cooking time.	1 0 0 0	10:00
4	Select desired power level by pressing the POWER LEVEL pad (for 1200W press once).	POWER LEVEL x 1	1200 W / PRESS / AGAIN / TO / LOWER / POWER / OR PUSH / START
5	Press the START/+30SEC. pad.	START +30SEC.	ENTER / TIME / PRESS / START
6	For second sequence, enter desired cooking time.	3 0 0	03:00
7	Press the START/+30SEC. pad.	START +30SEC.	10:00 (COOK) The timer begins to count down to zero. When it reaches zero, 3:00 (COOK) the second sequence will appear and the timer will begin counting down to zero again.

START/+30SEC.

For your convenience Sharp's Instant Cook allows you to easily cook for 30 seconds on 1200W power.

Step	Procedure	Pad Order	Display
1	Press the START/+30SEC. pad. Within 30 seconds of closing the door, cooking completion or pressing the STOP/CLEAR pad.	START +30SEC.	0:30 The timer begins to count down.

Press the START/+30SEC. pad until desired time is displayed.
Each time the pad is pressed, the cook time is increased by 30 seconds.

Increasing Time During a Cooking Program

Microwave time can be added during a manual cooking program using the START/+30SEC. pad.

* Suppose you want to increase the cooking time by 2 minutes during 5 minutes on 700W power cooking. (at the moment the remaining cooking time is 1 min. 30 sec.)

Step	Procedure	Pad Order	Display
1	Select power level by pressing the POWER LEVEL pad as required (for 700W press six times).	POWER LEVEL x 6	700 W PRESS AGAIN TO LOWER POWER OR PUSH START
2	Press the START/+30SEC. pad.	START +30SEC.	ENTER TIME PRESS START
3	Enter desired cooking time.	5 0 0	05:00
4	Press the START/+30SEC. pad.	START +30SEC.	5:00 The timer starts to count down. 1:30
5	Press the START/+30SEC. pad 4 times to increase the cooking time by two minutes.	START +30SEC. x 4	3:30

Notes for Automatic Operations

1. Wipe off any moisture from the outside of cooking containers and the interior of the oven with a dry cloth or paper towel prior to cooking on any SMART SENSOR COOK menus.
2. After oven is plugged in, wait 2 minutes before using SMART SENSOR COOK menus.
3. When cooking small quantities of food on SMART SENSOR COOK menus, the food may be cooked without displaying any remaining cooking time or requiring any operations during the cooking.
4. When using the automatic features, carefully follow the instructions provided in each MENU GUIDE to achieve the best result.
   If the instructions are not followed carefully, the food may be overcooked or undercooked.Please follow instructions carefully.
5. Food weighing more or less than the quantity or weight listed in each MENU GUIDE should be cooked manually. Refer to manual cooking charts in the RECIPES section.
6. The final cooking result will vary according to the foods condition (e.g.initial temperature, shape, quality). Check the food after cooking and if necessary continue cooking manually.
7. After cooking, the fan will continue to operate. COOLING may be displayed when the door is opened or STOP/CLEAR pad is pressed while fan is operating.

Smart Sensor Cook

RICE/ QUINOA	PASTA
POTATO	VEGETABLES

RICE / QUINOA	PASTA	POTATO	VEGETABLES
1.White Rice	1.Pasta	1.Jacket Potato	1.Fresh Vegetables
2.Brown Rice	2.Wholemeal Pasta	2.Sweet Jacket Potato	2.Frozen Vegetables
3.Quinoa		3.Boiled Potato	

SMART SENSOR COOK will automatically compute the power level and cooking time. SMART SENSOR COOK has 4 categories. To select a menu, press the desired SMART SENSOR COOK pad until the menu of your choice is displayed. Follow the instructions provided in the SMART SENSOR COOK MENU GUIDE on pages ⑤⑥ of the cooking guide.

* Suppose you want to use Sensor Cook to cook 2 Jacket Potatoes.

Step	Procedure	Pad Order	Display
1	Press the POTATO pad once.	POTATO x 1	JACKET / POTATO / PRESS / START
2	Press the START/+30SEC. pad. * When the sensor detects the vapour from the food, the remaining cooking time will appear. (eg. remaining cooking time is approximately 4 min. 36 sec.)	START +30SEC.	SENSING / COOK / 4:36 The cooking time will begin counting down. The oven will "beep" 4 times and will stop. TURN OVER POTATO PRESS START will be displayed repeatedly.
3	Open the door. Turn over. Close the door.		TURN OVER POTATO PRESS START will be displayed.
4	Press the START/+30SEC. pad.	START +30SEC.	3:00 The cooking time will begin counting down. When it reaches zero, the oven will "beep". FINISH REMOVE FOOD will be displayed.

Smart Convenience Menu

REHEAT PLATE	REHEAT BEVERAGE
MELT/ SOFTEN	SCRAMBLED EGGS
MUG CAKE	FAVOURITE

REHEAT PLATE	REHEAT BEVERAGE	MELT / SOFTEN	SCRAMBLED EGGS	MUG CAKE
(1 Plate)	(1 Mug)	1.Chocolate 2.Butter 3.Cream Cheese	(1 Serve)	(1 Mug Cake)

CONVENIENCE allows you to use preprogrammed popular menus.
Follow the instructions provided in the CONVENIENCE MENU GUIDE on pages ③-④ of the cooking guides.

* Suppose you want to melt 250g of Chocolate.

Step	Procedure	Pad Order	Display
1	Press the MELT SOFTEN pad until the desired menu is displayed (for Chocolate press once).	MELT/ SOFTEN x 1	CHOC / PRESS / START
2	Press the START/+30SEC. pad.	START +30SEC.	ENTER / 100 G / OR / 250 G / PRESS / START
3	Press the number pads to enter weight.	2 5 0	250 G
4	Press the START/+30SEC. pad.	START +30SEC.	2:20 The cooking time will begin counting down. The oven will "beep" 4 times and will stop. STIR CHOC PRESS START will be displayed repeatedly.
5	Open the door. Stir. Close the door.		STIR CHOC PRESS START will be displayed.
6	Press the START/+30SEC. pad.	START +30SEC.	1:10 The cooking time will begin counting down. When it reaches zero, the oven will "beep". FINISH REMOVE FOOD will be displayed repeatedly.

Smart Defrost Menu

MEAT POULTRY/ FISH

MEAT	POULTRY / FISH
1.Mince	1.Whole Chicken
2.Steak / Chops	2.Chicken Fillet
3.Roast Meat	3.Fish Fillet

DEFROST will automatically compute the microwave power and defrosting time.

Follow the instructions provided in the DEFROST MENU GUIDE on page ⑦-⑧ of the cooking guides.

* Suppose you want to defrost 1.5 kg of Whole Chicken.

Step	Procedure	Pad Order	Display
1	Press the POULTRY/FISH pad until the desired menu is displayed (for Whole Chicken press once).	POULTRY FISH x 1	WHOLE / CHICKEN / PRESS / START
2	Press the START/+30SEC. pad.	START +30SEC.	ENTER / WEIGHT / 1-2KG / PRESS / START
3	Press the number pads to enter weight.	1 5 0	1.50 KG
4	Press the START/+30SEC. pad.	START +30SEC.	14:30 The defrosting time will begin counting down. The oven will "beep" 4 times and stop. TURN OVER CHICKEN PRESS START will be displayed repeatedly.
5	Open the door. Remove defrosted pieces, turn over remaining pieces and shield warm portion. Close the door.		TURN OVER CHICKEN PRESS START will be displayed repeatedly.
6	Press the START/+30SEC. pad.	START +30SEC.	7:15 The defrosting time will begin counting down. When it reaches zero, the oven will "beep". FINISH REMOVE FOOD will be displayed repeatedly.

Set Timer

Use this feature as a general purpose timer. Examples include:

timing boiled eggs cooked on the stove top.
timing the recommended standing time of food.

You can enter any time up to 99 minutes, 99 seconds. If you want to cancel the timer during the count down phase simply press STOP/CLEAR.

* Suppose you want to set the timer for 3 minutes to boil an egg on the stove top.

Step	Procedure	Pad Order	Display
1	Press the CLOCK/SET TIMER pad twice.	CLOCK/ SET TIMER x 2	SET TIMER PRESS START
2	Press the START/+30SEC. pad.	START +30SEC.	ENTER TIME PRESS START
3	Enter desired time.	3 0 0	03:00
4	Press the START/+30SEC. pad.	START +30SEC.	3:00 The timer begins to count down. When the timer reaches zero, the oven will "beep".

Favourite

The favourite function allows you to store 3 frequently used microwave power levels and cook times to make cooking/reheating more convenient.

Example: Set the following procedure as Favourite 2.
Cook food for 3 minutes 20 seconds at 1000W microwave power.

Step	Procedure	Pad Order	Display
1	Press the FAVOURITE pad twice.	FAVOURITE x 2	2 PRESS START OR PRESS POWER LEVEL KEY TO PROGRAM

If the procedure has been set, press "START/ 30SEC." to use it. If not, continue to set the procedure.
Only one or two states can be set.

Step	Procedure	Pad Order	Display
2	Select desired power level by pressing the POWER LEVEL pad.	POWER LEVEL x 3	1000 W PRESS AGAIN TO LOWER POWER OR PUSH START
3	Press the START/+30SEC. pad.	START +30SEC.	ENTER TIME PRESS START
4	Enter desired cooking time.	3 2 O	03:20
5	Press the START/+30SEC. pad.	START +30SEC.	ENTER 2ND MICRO WATTAGE OR PUSH START TO END
6	Press the START/+30SEC. Pad to save the procedure as FAVOURITE 2 and to operate. To add another stage to the program repeat steps 2 to 5.	START +30SEC.	

Child Lock

If the oven is accidentally started with no food or liquid in the cavity, the life of the oven can be reduced.
To prevent accidents like this, your oven has a "Child Lock" feature that you can set when the oven is not in use.

* To set the Child Lock.

Step	Procedure	Pad Order	Display
1	Press the number 0 pad for 3 seconds.	0	CHILD LOCK
2	Press the START/+30SEC. pad.	START +30SEC.	LOCK The time of day will appear in the display.

The control panel is now locked, each time a pad is pressed, the display will show "LOCK".

* To cancel the Child Lock.

Step	Procedure	Pad Order	Display
3	Press the STOP/CLEAR button for 3 seconds.	STOP CLEAR	LOCK OFF The time of day will appear in the display. The oven is ready to use.

To set the present time of day. See page 7.

CARE AND CLEANING

CLEAN THE OVEN AT REGULAR INTERVALS - Keep the oven clean and remove any food deposits, or it could lead to deterioration of the surface. This could adversely affect the life of the appliance and possibly result in a hazardous situation.

Exterior:
The outside may be cleaned with mild soap and warm water, wipe clean with a damp cloth. Avoid the use of harsh abrasive cleaners. Keep the ventilation openings free of dust.

Door:
Wipe the door and window on both sides, the door seals and adjacent parts frequently with a damp cloth to remove any spills or spatters. Do not use abrasive cleaners.

Touch Control Panel:
Wipe the panel with a slightly dampened cloth with water only.
Do not scrub or use any sort of chemical cleaners. Avoid the use of excess water.

Interior walls:
To clean the interior surfaces, wipe with a soft cloth and warm water. After use wipe the waveguide cover in the oven with a soft damp cloth to remove any food splashes. Built-up splashes may overheat and begin to smoke or catch fire. Do not remove the waveguide cover. DO NOT USE A COMMERCIAL OVEN CLEANER, ABRASIVE OR HARSH CLEANERS AND SCOURING PADS ON ANY PART OF YOUR MICROWAVE OVEN. NEVER SPRAY OVEN CLEANERS DIRECTLY ONTO ANY PART OF YOUR OVEN. Avoid using excess water. After cleaning the oven, ensure any water is removed with a soft cloth.

Turntable/Roller Stay:
Wash with mild soapy water and dry thoroughly.

SERVICE CALL CHECK

Please check the following before calling for service:

1. Does the display light up? YES _____ NO _____
2. When the door is opened, does the oven lamp come on? YES _____ NO _____
3. Place one cup of water (approx. 250 ml) in a glass measure in the oven and close the door securely. Oven lamp should go off if door is closed properly. Press the START/+30SEC. pad once.
   A. Does the oven lamp come on? YES _____ NO _____
   B. Does the cooling fan work? YES _____ NO _____
   (Put your hand over the rear ventilation openings.)
   C. Does the turntable rotate? YES _____ NO _____
   (The turntable can rotate clockwise or counterclockwise. This is quite normal.)
   D. After one minute, did an audible signal sound and COOK indicator go off? YES _____ NO _____
   E. Is the water inside the oven hot? YES _____ NO _____

If “NO” is the answer to any of the above questions, please check your wall socket and the fuse in your meter box. If both the wall socket and the fuse are functioning properly, CONTACT YOUR NEAREST SERVICE CENTRE APPROVED BY SHARP.

NOTE: In high / medium high power, output power will gradually be reduced to avoid overheating.

SPECIFICATIONS

AC Line Voltage	Single phase 230–240V, 50Hz
AC Power Required (Steady)	1300 W
AC Power Required (Initial)	1900 W
Output Power	1200 W* (IEC test procedure)
Microwave Frequency	2450 MHz (Class B/Group 2)**
Outside Dimensions (W x H x D)	520×315×410mm
Cavity Dimensions (W x H x D)	351×251×388mm
Overall Cavity Volume	34L
Weight	Approx.11.70kg

* When tested in accordance with AS/NZS 2895.1.2007

** This is the classification of ISM (Industrial, Scientific and Medical) equipment described in the International Standard CISPR11.

HINTS

- Always place the stems of vegetables – e.g. cauliflower, broccoli – toward the outside of the dish. The stems are tougher than the flower, so this will ensure even cooking.
- Ice-cream containers were made for freezing food and are not suitable for use in a microwave oven.
- Remember: When melting chocolate in the microwave oven, it holds its shape until stirred. Refer to MELT/ SOFTEN MENU GUIDE on page ④ for instructions.
- Jams and chutneys are great when made in the microwave, as they retain their colour and flavour.
  As cooking time is so short, less evaporation occurs. Therefore pectin or a jam setting agent is required to make jam set.
- To obtain more juice from oranges, lemons or limes, prick skin, microwave 30 seconds on HIGH and stand 2 minutes before squeezing.
- Warm jam for a quick glaze. Heat 2-3 tablespoons for 30 seconds on HIGH; strain if necessary while hot.
- Soften cream cheese for dips or beating by removing foil wrapper and cooking for 1 minute on MEDIUM LOW.
- To melt marshmallows, place 100 g in a large bowl. Cook for 30 seconds on HIGH.
- To dissolve gelatine, mix 1 teaspoon gelatine with 2 tablespoons water and cook for 20-30 seconds on HIGH. Stir well.
- To blanch almonds place 100 g in a bowl with 1 cup of water. Cook for 5 minutes on HIGH.
- If brown sugar becomes hard, simply soften in the microwave oven. Place a cup at a time in a bowl with a slice of bread. Cover with plastic wrap and cook for 40 seconds on HIGH.
- Soften 6-8 honey-snap biscuits for 30 seconds on HIGH. Shape into base of patty dish for quick tartlet cases.
- Place a chocolate after-dinner mint on top of 6 patty cakes; arrange cakes evenly on turntable. Cook about 50-60 seconds on HIGH, or until chocolate is soft. Gently spread chocolate mint evenly over patty cake for a quick icing.
- To soften honey, remove metal lid from jar and microwave on HIGH for 30 seconds.
- Stuffed mushrooms are a terrific idea. Provided the filling is cooked, twelve mushrooms placed on a layer of paper towel will take approximately 3 minutes to heat on HIGH.
- To remove odours, place 1-litre water with slice of lemon or 1 teaspoon vanilla essence in the microwave. Cook for 20 minutes on HIGH.
- As microwave cooking time is so quick, food should be seasoned to taste with herbs and spices after cooking.
- To peel a tomato, pierce the skin with a fork 3-4 times. Place on a rack and cook for 45-60 seconds on HIGH. Stand for 3 minutes before peeling.
- Lightly prick the skin of chicken before cooking. This prevents the loud popping noises.
- Peeling garlic is made easier by placing a clove in the microwave for 10 seconds on HIGH.
- Pierce the skin of chicken livers with a fork before cooking to prevent popping of the internal fat. Cover with paper towel when cooking.
- The flavour of wine in food is highlighted with the short microwave cooking time, so adjust the quantity to your taste.
- Tomato sauce can be warmed for 30 seconds on HIGH to give it a pouring consistency. (ensure lid is removed.)
- When cooking sauces in the microwave use less liquid: the absence of direct heat means sauces do not reduce as much as stovetop-prepared sauces.
- Rice and pasta cook well in small quantities. Use a large container to prevent boiling over.
- FOIL. Contrary to popular belief, foil can be used in the microwave – for shielding, not covering. It must not come in contact with the walls of the microwave. Foil directs microwave energy away from delicate or thin areas of food, toward areas that need more cooking. It is essential for even defrosting. Place foil over the thawed sections, allowing the frozen portions to continue defrosting.
- To enhance the colour and flavour when roasting chicken, mix some brown sugar, honey and a little soy sauce together and brush both sides of poultry before and during cooking.
- To blanch vegetables for freezing, place 150 g of vegetables in a dish with 1 tablespoon of water.
  Cover and cook on HIGH for 1/3 of the usual cooking time. After cooking, immerse immediately in iced water, package, label, and freeze for up to 3 months.
- Do not add salt to vegetables before cooking, as salt draws out the moisture and causes vegetables to toughen.

COMMONLY ASKED QUESTIONS AND ANSWERS

MICROWAVES COOK FROM THE INSIDE OUT. They certainly do not. Microwaves penetrate foods from the outside to a depth of about 2.5 cm. Small foods, under 5 cm in diameter, are penetrated to the centre from all sides. With large foods, energy creates heat in the outer layer; then the heat moves to the centre by conduction, as it does conventionally. A few foods may appear to cook more on the inside. One example is an egg. Energy penetrates to the centre, where the fatty yolk becomes hotter than the white, and cooks quicker.

YOU CAN'T USE METAL IN A MICROWAVE OVEN.

False. Metal reflects microwaves; the oven itself is made of metal so microwave energy can't escape. Inside the oven, metal slows cooking because it keeps energy from reaching parts of the food. You can use the reflective properties of metal to protect foods which might overcook in some areas.

DISHES DON'T GET HOT IN A MICROWAVE OVEN.

Keep your oven mitts handy. A microwave-safe utensil will not be heated by microwave energy, but it will become hot from contact with hot food. Heat tends to equalise. A warm object heats the air around it, like a radiator in a cool room. When food becomes hot, some of this heat is transferred to the dish.

POINTS TO REMEMBER

As a general guide:
HIGH – is ideal for vegetables, fruit, soup, beverages, bacon and sauces.
MEDIUM HIGH – for roasting lamb, roasting chicken and fish fillets.
MEDIUM – is for roasting beef, pork and simmering; great for casseroles or stews and cooking seafood.
MEDIUM LOW – allows you to defrost.
LOW – is used to keep foods warm once they are cooked.

- The more food in the microwave oven, the longer it takes to cook.
- Reduce liquids in a microwave recipe because there is not as much evaporation, due to the shorter cooking time.
- Reduce seasonings slightly because flavours will be unbalanced by quantity of liquid. Do not add salt until the end of the cooking process.
- Microwaves cook from the outside to the centre, so when arranging foods always place the thicker or more dense portions of food at the outside, with the thinner, less-dense pieces on the inside.
- Foil can be used in the microwave oven successfully.

Just remember two rules:

(a) There must be at least half of the food exposed to the microwaves.
(b) Do not let the foil touch the sides of the oven.

Use foil to shield thinner parts of food when defrosting, to prevent over-cooking and drying out.

- All food continues to cook after it leaves the microwave oven because the heat is stored in the food and not in the oven.

Standing time required will vary according to the volume and density of food.

e.g. Fish and vegetables – 1-5 minutes
Cakes – 3-10 minutes
Roasts – 10-15 minutes
Cover foods with a lid or foil when standing.

- When reheating foods always cover with a lid, plastic wrap or paper towel to prevent foods from drying out. Reheat on MEDIUM for best results.
- Always pierce food that has a membrane – for example eggs, tomatoes, potatoes and kidneys.
- Remember to cover vegetables with a lid or plastic wrap when cooking.

GLOSSARY OF TERMS

SPOON MEASURES

1 tablespoon	=	20 mL
1 teaspoon	=	5 mL
1/2 teaspoon	=	2.5 mL
1/4 teaspoon	=	1.25 mL

LIQUID MEASURES

Cups		Metric		Imperial
1 cup	=	250 mL	=	8 fl. oz.
1/2 cup	=	125 mL	=	4 fl. oz.
1/3 cup	=	80 mL	=	2.5 fl. oz.
1/4 cup	=	60 mL	=	2 fl. oz.

CUP MEASURES

	Metric	Imperial
1 cup flour	140 g	4 1/2 oz.
1 cup sugar	250 g	8 oz.
1 cup brown sugar	185 g	6 oz.
1 cup icing sugar	185 g	6 oz.
1 cup butter/margarine	250 g	8 oz.
1 cup honey/golden syrup	375 g	12 oz.
1 cup fresh breadcrumbs	60 g	2 oz.
1 cup crushed biscuits	125 g	4 oz.
1 cup uncooked rice	220 g	7 oz.
1 cup mixed fruit	185 g	6 oz.
1 cup chopped nuts	125 g	4 oz.
1 cup coconut	90 g	3 oz.

DRY INGREDIENTS

Metric		Imperial
15 g	=	1/2 oz.
30 g	=	1 oz.
60 g	=	2 oz.
90 g	=	3 oz.
125 g	=	4 oz.
185 g	=	6 oz.
250 g	=	8 oz.
500 g	=	1 lb.
1000 g (1 kg)	=	2 lb.

NOTE
- Recipes in this book use standard metric equipment approved by the Australian Standards Association.
- All spoon and cup measures are level.
- All recipes in this book that include eggs require 55 g unless otherwise specified.

GENERAL INFORMATION

DEFROSTING

Thawing food, especially meats, using the microwave oven is not only faster than any other method but it can also give better results.

Once frozen meat is thawed, it begins to lose its juices.

With a microwave oven you can thaw meat just before you plan to cook it, thus preserving the quality.

Microwave thawing doesn't mean a lot of fuss, but some attention is needed to make sure that parts of food do not start to cook before the centre is thawed. MEDIUM LOW is fast enough to be convenient but gentle enough to give good results.

POULTRY

Start thawing poultry breast-side down; shield warm areas and turn over halfway through defrosting. Let poultry stand 30 to 60 minutes after thawing, until giblets and neck can be removed and breast meat under wings is completely thawed.

CUTS OF MEAT

Break up or separate minced beef, cubed meat, chicken pieces or fish fillets after one-third of thawing time.
Remove any thawed pieces. Place remainder in baking dish to complete thawing. Turn over roasts, steaks, chops or chicken. Separate as soon as possible.

JOINTS

Turn over large roasts halfway through defrosting. As you turn, touch the meat to find warm areas and shield these with small pieces of foil. Let roasts stand 30 to 45 minutes after defrosting time. Thaw meats and poultry only until they can be pierced in the centre with a skewer. Surface or cavity should feel cool but not icy. Cook as soon as possible to prevent loss of juices.

REHEATING

Foods reheated in the microwave oven taste freshly cooked, not reheated. Suit the power level to the food. A bowl of leftover vegetables can be reheated at HIGH, while lasagne, which contains sensitive cheese and cannot be stirred, should be reheated at MEDIUM HIGH or MEDIUM.

CASSEROLES

Cover dish tightly with plastic wrap or a lid. Stir several times during reheating, especially if casserole has been refrigerated. If casserole cannot be stirred, reheat at MEDIUM.

MEATS

Medium to thin slices reheat best. Cover meat with sauce or gravy. Cover with microwave plastic wrap to hold in heat. Reheat on MEDIUM.

PLATES OF FOOD

Arrange food with thickest parts of meat and bulky vegetables to outside of the plate. Place quick-to-heat foods in the centre. Cover with microwave plastic wrap. Reheat on MEDIUM.

VEGETABLES

Wrap large, whole vegetables in microwave plastic wrap. Cover dishes of vegetables and stir during reheating, if possible.

TOASTING

ALMONDS

Place 100 g almonds in a glass dish; cook for 3-3 1/2 minutes on HIGH, or until golden brown. Stir almonds every minute during cooking.

SESAME SEEDS

Place 1/4 cup sesame seeds in a glass bowl; cook for 2-3 minutes on HIGH, or until golden. Stir every minute.

RECONSTITUTING DRIED FOODS

DRIED FRUITS

Place 1 cup of fruit in a bowl, cover with cold water, and cook for 4 1/2-5 minutes on HIGH. Stand covered for 5 minutes before using.

DRIED MUSHROOMS

Place in a bowl with 2 cups of water and heat, slowly, 8-10 minutes on LOW.

REHEATING/DEFROSTING CONVENIENCE FOODS CHART

FOOD	AMOUNT	MICROWAVE TIME AND POWER LEVEL	PROCEDURE	STANDING TIME
Beverage (room temp.) 250mL per cup	1 cup 2 cups	1 minute 30 seconds – 2 minutes at 1000W 3-4 minutes at 1000W	Stir after heating.	
Canned Food (room temp.) (e.g. Spaghetti, Baked Beans)	1 cup 2 cups	4-6 minutes at 700W 6-8 minutes at 700W	Place food in bowl. Cover with plastic wrap and pierce 5 times with a skewer. Stir halfway.	2 minutes
Canned Soup (room temp) 250mL per cup (thin soup)	1 cup 2 cups	3-5 minutes at 1200W 5-7 minutes at 1200W	Place food in bowl. Cover with plastic wrap or lid. Stir halfway.	2 minutes
Meat Pie (refrigerated) Individual 180g each	1 pie 4 pies	5-6 minutes at 700W 10-11 minutes at 700W	Place directly on turntable, face side down. Cover with paper towel. Turn over halfway.	2 minutes
Frozen Rice/Pasta Dinners (e.g. Lasange, Risotto)	300-500g	6-7 minutes at 1200W	Remove from foil container. Cover with plastic wrap or lid. Allow to stand.	2 minutes
Dinner Plate (refrigerated) 350g-400g per serve	1 serve	3 minutes 30 seconds – 4 minutes at 1000W	Cover plate with plastic wrap and pierce 5 times with a skewer. Place directly on turntable. Allow to stand.	2 minutes
Casserole (refrigerated) 250g per serve	1 serve 2 serves	4-5 minutes at 700W 6-8 minutes at 700W	Place in a bowl, cover with plastic wrap. Place directly on turntable. Stir halfway. Allow to stand, then stir.	2 minutes
Croissants (frozen)	1 2	1 minute at 400W 1 minute 30 seconds at 400W	Place between paper towels. Place directly on the turntable.	
Fruit Pie individual (frozen) 135g each	1 2	2-3 minutes at 400W 3-4 minutes at 400W	Remove from foil container. Place on a plate and then onto the turntable. Allow to stand.	2 minutes
Danish Pastry whole (frozen)	400g	5-6 minutes at 400W	Remove from foil container. Place on dinner plate. Allow to stand.	2 minutes

NOTE: Room Temperature +20ºC
Refrigerator Temperature +3ºC
Frozen Temperature -18ºC

FROZEN VEGETABLE CHART

1. Place vegetables in a medium/large microwave safe bowl and cover with plastic wrap.
2. Halfway through cooking, stir the vegetables to ensure even cooking.
3. Allow to stand for 2 minutes before draining any water and serving.

VEGETABLE	AMOUNT	MICROWAVE TIME 1200W	PROCEDURE
Beans (green, cut)	500g	8-10 minutes	
Broccoli	500g	8-10 minutes	Break apart as soon as possible. Arrange with flower towards the centre.
Carrots (sliced)	500g	9-11 minutes	Stir halfway through.
Cauliflower	500g	8-10 minutes	Break apart as soon as possible. Arrange with flower towards the centre.
Corn on the Cob	4 pieces	7-9 minutes	
Peas (green)	500g	7-9 minutes	
Spinach	250g	6-8 minutes	Break apart as soon as possible.
Mixed Vegetables (i.e. carrots, beans and corn kernels)	500g	13-14 minutes	Break apart as soon as possible.

RICE AND PASTA COOKING CHART

1. Wash and strain rice before measuring amounts.
2. Place rice/pasta in a medium/large microwave safe bowl with water. Cook uncovered, stirring halfway through cooking. Allow to stand for 2 minutes before straining any remaining water and serving.

FOOD		OTHER INGREDIENTS	MICROWAVE TIME 1200W
Pasta	1 cup	2 cups hot water	12-13 minutes
	2 cups	4 cups hot water	16-17 minutes
	4 cups	6 cups hot water	20-21 minutes
White Rice	1 cup	2 cups hot water	14-15 minutes
	2 cups	4 cups hot water	19-20 minutes
	4 cups	6 cups hot water	24-25 minutes
Brown Rice	1 cup	2 cups hot water	23-24 minutes
	2 cups	4 cups hot water	34-35 minutes
	4 cups	6 cups hot water	44-45 minutes
Quick Oats	1 cup	2 ¼ cups milk	5 minutes

SCRAMBLED EGG GUIDE

Place butter, eggs and milk in a small/medium microwave safe bowl. Beat with a fork until well combined and yolks of eggs are completely stirred in. Cook uncovered, stirring halfway through cooking.

EGG(S)	BUTTER	MILK	MICROWAVE TIME 770W
1	1 tsp	1 tbsp	1 minute
2	2 tsp	1 tbsp	1 minute 30 seconds
3	1 tbsp	2 tbsp	2 minutes 30 seconds
4	1 tbsp	¼ cup	4 minutes

MICROWAVE: FRESH VEGETABLE CHART

1. Wash vegetables under cold running water.
2. Cover required dishes with plastic wrap or a lid.
3. Drain any remaining water after standing, before serving.

VEGETABLE	AMOUNT	MICROWAVE TIME 1200W	PROCEDURE
Asparagus (halved)	500g	4-6 minutes	Place in a microwave safe dish. Cover. Stand for 2 minutes.
Beans (top and tailed)	500g	4-6 minutes	Place in a microwave safe dish with 1 tablespoon of water. Cover. Stand for 2 minutes.
Broccoli (uniform florets)	500g	4-6 minutes	Place in a microwave safe dish. Cover. Stand for 2 minutes.
Brussels Sprouts	500g	4-6 minutes	Place in a microwave safe dish. Cover. Stand for 2 minutes.
Cabbage (shredded)	500g	6-8 minutes	Place in a microwave safe dish with 2 tablespoons of water. Cover. Stand for 2 minutes.
Carrots (sliced)	500g	5-7 minutes	Place in a microwave safe dish. Cover. Stand for 2 minutes (cook for longer for less crunch).
Cauliflower (uniform florets)	500g	5-7 minutes	Place in a microwave safe dish with 1 tablespoon of water. Cover. Stand for 2 minutes.
Corn on the Cob	2 pieces	6-8 minutes	Rinse corn under cold water. Place corn in husk and place directly on the turntable. Turn over during cooking. Stand for 2 minutes.
Mushrooms (quartered)	500g	4-6 minutes	Place in a microwave safe dish with 1 tablespoon of water. Cover. Stand for 2 minutes.
Potatoes – Jacket	4 medium	12-13 minutes	Pierce with a fork. Turn over during cooking. Stand for 2 minutes.
Potatoes – Boiled	4 medium	14-16 minutes	Peel and quarter potatoes. Cook in a dish with ⅓ cup water. Cook covered. Stand for 2 minutes.
Pumpkin (2cm cubes)	500g	7-8 minutes	Place in a microwave safe dish. Cover. Stand for 2 minutes.
Spinach (shredded)	500g	3-4 minutes	Place in a microwave safe dish with 1 tablespoon of water. Cover. Stand for 2 minutes.
Snow Peas (top and tailed)	500g	3-5 minutes	Place in a microwave safe dish with 1 tablespoon of water. Cover. Stand for 2 minutes (cook for longer for less crunch).
Sweet Potato (2cm cubes)	500g	5-7 minutes	Place in a microwave safe dish. Cover. Stand for 2 minutes.
Zucchini (sliced)	500g	4-6 minutes	Place in a microwave safe dish with 1 tablespoon of water. Cover. Stand for 2 minutes.

CHARTS

DEFROST MEAT, POULTRY, BREAD and PIES CHARTS

1. Remove wrapping and place frozen item on a shallow, Microwave safe plastic defrost rack. If necessary, shield thin areas with aluminum foil to prevent the item from cooking while defrosting.
2. Defrost by following the steps in the “Microwave Time” column.
3. Set the microwave to 400W.
4. When turning over, re-shield any warm areas so it continues to defrost without cooking.

CUT	MICROWAVE TIME	STANDING TIME
BEEF (Roast) Steaks Minced Beef	5-7 minutes/500g 4-6 minutes/500g 5-7 minutes/500g	10-15 minutes 10 minutes 10 minutes
PORK (Roast) Chops Ribs Minced Pork	5-7 minutes/500g 4-6 minutes/500g 5-6 minutes/500g 5-6 minutes/500g	10-15 minutes 10 minutes 10 minutes 10 minutes
LAMB (Roast) Shoulder Chops	5-7 minutes/500g 5-7 minutes/500g 4-6 minutes/500g	10-15 minutes 10 minutes 10 minutes
POULTRY Chicken (Whole) Pieces	7-9 minutes/500g 5-6 minutes/500g	10-15 minutes 10 minutes

BREAD / PIES	MICROWAVE TIME	PROCEDURE
2 Slices of Bread	30 seconds to1 minute	Place between paper towel and place directly on the turntable.
4 Slices of Bread	1 minute to 1 minute 30 seconds	
1 Bread Roll	1 minute	
2 Bread Rolls	2 minutes	
Individual Pies	3 minutes	Remove from packaging. Place between paper towel and place directly on the turntable. Turn over halfway. Allow to stand 3-5 minutes before reheating.

CASHEW FUDGE

Serves 8

125 g butter
2 tablespoons golden syrup
1x 400 g can sweetened condensed milk
1 cup brown sugar
100 g packet choc bits
1 cup 125 g chopped cashews (unsalted)
1/2 teaspoon vanilla essence

1. In a large microwave safe glass bowl, combine the butter, golden syrup, condensed milk and sugar. Mix well. Cook for 6 minutes on MEDIUM HIGH (900W), stirring every minute. To avoid a grainy texture, do not scrape the undissovled sugar crystals from the sides down into the bowl during cooking.
2. Stir in the choc bits, cashews and vanilla essence.
3. Pour the mixture into a greased and lined 28x18cm lamington tin.
4. Refrigerate until firm. Cut into squares.

PUMPKIN PIE

Serves 8

CRUST

60 g butter or margarine
1 cup crushed sweet biscuits
1/4 cup brown sugar

FILLING

250g cream cheese
1 cup cooked pumpkin
3/4 cup brown sugar
2 eggs
1 1/2 tablespoons plain flour
1/2 teaspoon ground cinnamon
1/4 teaspoon ground nutmeg
1/2 teaspoon vanilla essence

1. To make the pie crust, place the butter in a medium pyrex dish. Cook for 40 seconds on HIGH (1200W) until the butter is melted.
2. Add the biscuit crumbs and sugar. Mix thoroughly. Press the mixture firmly into the bottom and side of a 23cm microwave safe pie dish. Cook for 3 minutes on MEDIUM HIGH (900W) until hot. Set aside to cool completely.
3. To make the filling add the cream cheese in a large microwave safe glass bowl.
   Cook for 1 minute on MEDIUM (700W) until soft.
4. Add remaining ingredients. Beat at medium speed with an electric mixer, until smooth and well blended. Cook for 5 minutes on MEDIUM HIGH (900W) until hot and thick, stirring every minute.
5. Pour the filling into cooled crust. Cook for 10 minutes on MEDIUM (700W) until the filling is firm to touch, centre may appear soft set.
6. Refrigerate until completely set. Serve with cream or ice cream.

JAM

STRAWBERRY JAM

Makes approximately 2 x 500g jars.

2 punnets strawberries
1/4 cup lemon juice
2 cups sugar

1. Wash, hull and cut the strawberries in half.
2. In a large microwave safe glass bowl, combine the strawberries and lemon juice. Cook, uncovered for 3 minutes on HIGH (1200W).
3. Add the sugar and mix well. Cook uncovered, stirring occasionally, for 20 minutes on MEDIUM HIGH (900W). Caution: watch the jam closely the entire cooking time to ensure it does not boil over.
4. To test that the jam sets place 1 teaspoon on a small plate and let it cool. If it gels slightly, it is set.
5. Pour the jam into hot sterilised jars, seal and label.

MIXED BERRY AND APPLE JAM

Makes approximately 2 x 500g jars.

600 g frozen mixed berries
2 large Granny Smith apples, peeled and grated
1/2 cup apple juice
2 cups sugar

1. In a large microwave safe glass bowl, combine the frozen mixed berries, apples and juice. Cover with plastic cling-wrap and cook for 13 minutes on MEDIUM HIGH (900W).
2. Add the sugar and stir well. Cook, uncovered for 18 minutes on MEDIUM HIGH (900W), stirring twice during cooking and then once again after cooking is complete.
3. To test that the jam sets, place 1 teaspoon on a small plate and let it cool. If it gels slightly, it is set.
4. Pour the jam into hot sterilised jars, seal and label.

DESSERTS

BREAD AND BUTTER PUDDING

Serves 4-6

6 slices white bread, crusts removed
Butter for spreading
6 tablespoons fruit jam of choice
3 tablespoons caster sugar
1/4 cup sultanas
300ml cream
1/2 teaspoon vanilla essence
1 egg, lightly beaten
1/4 teaspoon ground nutmeg
extra sugar to sprinkle

1. Spread one side of the bread with butter and jam.
2. Cut the bread into 2cm squares.
3. In a 2 litre microwave safe pudding bowl, add the bread and sultanas and set aside.
4. In a medium bowl, whisk the egg. Add the cream, vanilla essence and sugar, continue to mix.
5. Pour the mixture over the bread and sultanas and sprinkle with nutmeg and extra sugar. Cook for 20 minutes on MEDIUM LOW (400W).
6. Allow to stand for 5-10 minutes. Serve with cream or ice cream.

CHOCOLATE FUDGE CAKE

2 cups sugar
3/4 cup cocoa powder
1 teaspoon baking powder
1 1/2 cups milk
1/2 cup oil
1 3/4 cups plain flour
2 eggs
2 teaspoons vanilla essence

ICING

125 g butter
1 cup icing sugar
1 tablespoon vanilla essence
125 g cream cheese
2 dessert spoons cocoa

1. In a large bowl, combine all the ingredients together. Using an electric hand mixer beat together for 3 minutes on a high setting.
2. Pour the batter into a greased microwave safe round cake dish.
3. Cook for 16-18 minutes on MEDIUM (700W). Allow to stand for 5-10 minutes before turning out.
4. To make the icing, beat together all the ingredients until light and creamy.
5. Ice the cooled cake and serve.

PEPPERMINT CHOC HAZELNUT MOUSSE

Serves 4

100 g dark chocolate chopped
100 g milk chocolate chopped
2 eggs separated
1 cup thickened cream whipped
1/2 cup hazelnuts finely chopped
2 teaspoons peppermint essence

1. Place dark chocolate and milk chocolate in a microwave safe bowl. Microwave on HIGH (1200W) for 2 minutes, stirring with a metal spoon halfway through cooking or until smooth. Cool slightly.
2. Stir in egg yolks until just combined, stir cream, hazelnuts and peppermint essence using an electric mixer, beat the egg whites in a separated bowl, until stiff peaks form. Fold egg whites in 2 batches into the chocolate mixture.
3. Spoon mixture into 4 glasses. Cover and refrigerate for 3 hours or until set.

CARAMEL RICE PUDDING

Serves 4-6

1 cup Arborio rice
3 cups hot water
395 g can sweetened condensed milk
1 tablespoon vanilla essence
Cinnamon sugar, to garnish
20 g butter
1 tablespoon lemon juice
3 eggs, separated
2 tablespoons caster sugar

1. In a large microwave safe glass bowl, combine the rice and hot water. Cook for 12-15 minutes on HIGH (1200W), stirring after 6-7 minutes until the rice is tender.
   Drain and set aside.
2. In a microwave safe glass jug, combine the condensed milk and butter. Cook for 6 minutes on 800W, stirring every 20 seconds to prevent the mixture from boiling over.
3. Stir the rice, lemon juice, egg yolk and vanilla essence into the caramel. Transfer the mixture to a 2 litre microwave safe pudding bowl. Set aside
4. Beat egg whites until stiff in a separate bowl, gradually beat in sugar.
5. Spoon the egg whites mixture over the rice pudding and sprinkle with the cinnamon sugar. Cook for 5 minutes on MEDIUM (700W).
6. Allow to stand for 5 minutes and serve with cream or ice cream.

MOIST CARROT CAKE

1 cup oil
1 cup brown sugar
3 eggs
1 1/2 cups self raising flour, sifted
1 teaspoon bicarbonate of soda
1 teaspoon ground cinnamon
Salt to taste
2 large carrots, grated
3/4 cup chopped walnuts

CREAM CHEESE ICING

250 g cream cheese
2 1/2 cups icing sugar
2 tablespoons lemon juice

1. In a large bowl, beat the oil, sugar and eggs until well combined.
2. Add flour, bicarbonate soda, cinnamon and salt.
3. Fold in the carrots and walnuts.
4. Pour into a greased 20cm microwave safe cake dish. Cook for 12 minutes on MEDIUM HIGH (900W).
5. Allow to stand for 5 minutes. Turn out and cool.
6. To make icing, beat cream cheese until smooth.
7. Add icing sugar and lemon juice and beat until smooth.
8. Ice the cake when cool.

CHILLI AND TOMATO SPAGHETTI

Serves 4-6

350 g spaghetti, snapped in half
1 1/2 litres hot water
1 birdseye chilli, finely chopped
1 spanish onion, finely chopped
2 cloves garlic finely chopped
1 can diced tomatoes
3 tablespoons extra virgin olive oil
salt and pepper to taste
2 handful of chopped continental parsley

1. In a large microwave safe glass bowl combine the spaghetti and hot water. Cook for 14 minutes on HIGH (1200W), stirring after 7 minutes. Drain and set aside.
2. In a medium microwave safe glass bowl add the oil onion and chilli. Cook for 3 minutes on 800W.
3. Add garlic, cook for 2 minutes on 800W.
4. Add tomatoes, salt and pepper, cook for 6 minutes on 800W stirring half way through.
5. Place spaghetti in serving dish, add parsley and sauce. Stir until well combined.
6. Serve with freshly grated parmesan cheese.

CHUNKY VEGETABLE SOUP

Serves 4-6

1/4 cup oil
60 g butter
2 onions peeled and chopped
3 carrots finely chopped
1 potato peeled and chopped
3 sticks celery chopped
2 zucchinis chopped
1/4 cabbage shredded
3 cups beef stock
2 cans chopped tomatoes
salt and pepper
parmesan cheese

1. Combine oil, butter and onion in a large casserole dish. Cook for 3 minutes on HIGH (1200W).
2. Add carrots and potato. Cover and cook for 6 minutes on MEDIUM HIGH (900W).
3. Add celery, zucchini and cabbage. Cover and cook for 4 minutes on MEDIUM HIGH (900W). Add stock, undrained tomatoes, salt and pepper. Cook covered for 27 minutes on 800W stirring occasionally
4. Serve hot, topped with parmesan cheese.

POTATO BAKE

Serves 4-6

4 large potatoes, peeled and sliced
1/4 cup hot water
1 onion, diced
2 teaspoons finely chopped garlic
2 rashers bacon, chopped
1/3 cup grated tasty cheese
1 tablespoon fresh parsley, chopped
cracked black pepper and salt, to taste
1/2 cup thickened cream

1. In a large microwave safe casserole dish, combine the potato and hot water. Cover and cook for 12 minutes on MEDIUM HIGH (900W). Drain.
2. Arrange the potato to cover the base of the dish. Place a layer of onion, one third of the garlic and bacon, and a quarter of the cheese on top of the potato layer. Sprinkle with one third of the parsley and season to taste.
3. Repeat this layering twice, beginning with potato.
4. Pour the cream over the top. Sprinkle with the remaining cheese and parsley. Add the salt and pepper to taste. Cook uncovered for 8 minutes on MEDIUM HIGH (900W), until the cheese has melted.
5. Allow to stand for 1 minute and serve as a side dish with a main meal.

THAI VEGETABLE NOODLE SOUP

Serves 4

1 teaspoon sesame oil
2 cloves garlic, crushed
100 g rice vermicelli noodles
2 cups vegetable stock
2 cm piece fresh ginger, grated
1 1/2 tablespoons oyster sauce
2 teaspoons hoisin sauce
1 carrot, thinly sliced
50 g cabbage, sliced
100 g cauliflower, cut into florets
200 g canned baby corn (drained)
1 shallot, sliced
100 g snow peas, topped and tailed
1 teaspoon fresh coriander, chopped

1. In a large bowl, add the noodles and cover with the boiling water. Leave to soak until soft, then drain. Set aside.
2. In a large microwave safe glass bowl, combine the oil and garlic. Cook for 1 minute on MEDIUM HIGH (900W), then stir.
3. Add the stock, ginger, sauces, carrot, cabbage and cauliflower. Cook for 5 minutes on MEDIUM HIGH (900W).
4. Add the remaining ingredients. Cook for 7 minutes on MEDIUM HIGH (900W).
5. Place the noodles into a serving bowl and pour the soup over the top.

VEGETABLES

POTATO, AVOCADO AND ONION SALAD

Serves 6

1 kg small potatoes
1 large onion, cut in half then sliced
1 tablespoon caster sugar
20 g butter
1/2 cup mayonnaise
150ml sour cream
black pepper
1 large avocado, cubed
chives, for garnish

1. Cut unpeeled potatoes in half. Place in a large microwave safe glass dish and cover with cold water. Cook, covered with a lid, for 23 minutes on HIGH (1200W).
   (potatoes should be tender but holding their shape) Drain.
2. Place onion, caster sugar and butter in a microwave safe glass dish. Cook for 5 minutes on 800W, stirring twice.
3. Combine mayonnaise, sour cream and black pepper. Pour over potatoes.
4. Toss on onions and avocado, sprinkle with chives.

HONEY GINGERED VEGETABLES

Serves 6

2 teaspoons grated ginger
2 tablespoons honey
1 tablespoon soy sauce
2 teaspoons lemon juice
500 g butternut pumpkin, peeled and thinly sliced
1 cup frozen beans
2 zucchinis, sliced
1 tablespoon sesame seeds

1. In a large microwave safe glass bowl, add ginger, honey, soy sauce and lemon juice stir and cook for 1 minute on HIGH (1200W).
2. Add pumpkin and cook covered 6 minutes on MEDIUM HIGH (900W), until just tender.
3. Stir in beans and zucchini, cook covered for a further 6 minutes on MEDIUM HIGH (900W).
4. Spoon onto a serving plate, sprinkle with sesame seeds.

HONEY CARROTS

Serves 4

500 g carrots, sliced lengthwise
60 g butter
1 tablespoon honey
1 teaspoon garlic, crushed
1 teaspoon sesame seeds

1. Combine all ingredients in a casserole dish.
2. Cover and cook for 8 minutes on MEDIUM HIGH (900W). Stir halfway through cooking.
3. Stand coved for 3 minutes before serving.
4. Sprinkle with sesame seeds.

VEGETABLE PLATTER

Serves 4

200 g carrots, sliced
200 g broccoli, cut into florets
100 g zucchini, sliced

1. Arrange vegetables in a microwave safe shallow casserole dish with the harder vegetables positioned around the outside and the softer vegetables in the centre.
2. Cover with lid or plastic wrap.
3. Cook for 7 minutes on HIGH (1200W).
4. Stand covered for 3 minutes, before serving.

CRAB MORNAY

Serves 6

350 g fresh crab meat or 2 x 170 g Cans crab meat drained
5 garlic cloves crushed
60 g butter
1/3 cup plain flour
1/2 teaspoon dry mustard
2 cups milk
1 onion, finely chopped
1/2 cup grated cheese
4 tablespoons tomato sauce
1/2 teaspoon Tabasco sauce
2 teaspoons Worcestershire sauce
3 tablespoons cream

1. In a large microwave safe glass bowl, melt butter for 30 seconds on HIGH (1200W), stir in flour and mustard. Cook for a further 1 minute on HIGH (1200W).
2. Gradually stir in milk, cook for 4 minutes on MEDIUM HIGH (900W), stirring every minute.
3. Place oil, onion and garlic in a small microwave safe glass bowl. Cook for 2 minutes on MEDIUM HIGH (900W), stir halfway.
4. Stir in onion and garlic, crab meat, salt and pepper, 1/4 cup cheese, tomato sauce, worcestershire sauce,Tabasco sauce,cream and garlic.
5 Place into a 1 litre serving dish, sprinkle with remaining cheese.
6. Cook for 9 minutes on MEDIUM (700W).
7. Serve with a garden salad.

CHEESY SALMON CANNELLONI

Serves 4-6

12 fresh cannelloni sheets
250 g ricotta cheese
90 g cheddar cheese
Salt and pepper to taste
2 eggs lightly beaten
210 g red salmon, drained with bones removed
2 teaspoons lemon juice
2 tablespoons fresh parley chopped
2 tablespoons of extra cheddar cheese
375 g jar pasta sauce

1. Combine ricotta cheese, cheddar cheese, salt and pepper, eggs, salmon and lemon juice and mix well.
2. Place spoonfuls of salmon mixture into cannelloni sheets and roll to form tubes.
3. Place tubes in a single layer in a shallow microwave safe glass dish.
4. Pour pasta sauce over cannelloni and smooth over with the back of a spoon to ensure all sections of the pasta are covered with sauce.
5. Cook for 15 minutes on MEDIUM HIGH (900W).
6. Remove dish and sprinkle with extra cheese. Continue cooking on 800W for a further 3 minutes. Allow to stand for 10 minutes before serving.
7. Sprinkle with chopped parsley to serve.

BOUILLABAISSE

Serves 8

6 frozen mussels half shell (thawed)
400 g scallops
300 g green prawns peeled and deveined
500 g firm fish fillets, cut into bite sized pieces
300 g seafood extender
1 onion finely diced
1 tablespoon olive oil
1 clove garlic crushed
1 1/2 cups fish stock
425 g can tomatoes pureed
1/2 cup white wine
2 tablespoons tomato paste
1/4 teaspoon turmeric
grated rind of 1 lemon
salt and pepper
1/4 cup chopped fresh basil

1. Wash and clean seafood.
2. Cook oil, onion and garlic in a large casserole dish for 1 1/2 minutes on MEDIUM HIGH (900W).
3. Stir in fish stock, tomatoes, white wine and tomato paste. Cover and cook for 8 minutes on MEDIUM HIGH (900W), stirring halfway through cooking.
4. Stir in scallops, prawns, turmeric, lemon rind, salt and pepper. Cover and cook for 6 minutes on 800W.
5 Stir in fish fillets, seafood extender and mussels. Cover and cook for 14 minutes on 800W, or until fish flakes.
6. Garnish with fresh chopped basil.

PRAWN CREOLE

Serves 4

20 g butter
1 medium onion chopped
1 capsicum chopped
1 stick celery sliced
2 tablespoons flour
1 400g can whole tomatoes
1/2 cup tomato paste
1 cup chicken stock
1 tablespoon chopped fresh parsley
2 teaspoons sugar
1/2 teaspoon salt
1/2 teaspoon chilli powder
500 g green prawns peeled and deveined

1. In a large microwave safe glass bowl, combine the butter, onion, capsicum and celery. Cook for 4 minutes on HIGH (1200W).
2. Stir in the flour, tomatoes, tomato paste, stock, sugar, salt and chilli powder. Mix well. Cook, uncovered for 5 minutes on MEDIUM HIGH (900W) stirring halfway.
3. Add the prawns and cook for 5 minutes on MEDIUM HIGH (900W) stirring halfway.
4. Sprinkle with chopped parsley.
5. Serve with rice.

CHILLI PRAWNS WITH SNOW PEAS

Serves 4

20 g butter
24 green prawns, peeled and deveined
1 small red capsicum, cut into thin strips
1 tablespoon fresh chives, chopped
100 g snow peas, topped and tailed
3 tablespoons sweet chilli sauce
grated rind of one lemon
freshly ground black pepper, to taste

1. In a large microwave safe glass bowl, add the butter, heat for 30 seconds on HIGH (1200W), until melted.
2. Add the prawns, capsicum, chives, chilli sauce, lemon rind and black pepper. Mix well. Cook for 5 minutes on MEDIUM (700W), stirring after 3 minutes.
3. Stir in the snow peas. Cook for 3 minutes on MEDIUM (700W).
4. Serve immediately with rice.

SEAFOOD

CRUNCHY CAMEMBERT CHICKEN

Serves 6

125g camembert cheese
Finely chopped
2 rashers bacon finely chopped
1/2 cup toasted slivered almonds chopped
2 tablespoons seeded mustard
1.5 kg chicken (approximately)
2 tablespoons honey

1. Mix camembert, bacon, almonds and 1 tablespoon mustard together.
2. Press camembert mixture between skin and flesh of chicken.
3. Tie chicken legs together.
4. Mix remaining mustard and honey. Brush over chicken, save some mixture to brush over chicken at halfway stage.
5. Place breast side down in a microwave safe dish, cook for 35 minutes on MEDIUM HIGH (900W). Turn over halfway through cooking, and brush with remaining mixture.
6. Allow to stand covered with foil for 10 minutes before serving.

CHICKEN SKEWERS IN FAMOUS PEANUT SAUCE

Serves 4

1/2 cup smooth peanut butter
2 tablespoons soy sauce
1 1/2 teaspoons water
1/2 teaspoon sugar
1 clove garlic crushed
2 drops Tabasco sauce
1/4 cup water extra
400 g chicken breast fillets (sliced approximately 1cm thick)
chopped coriander to garnish

1. In a small bowl, combine the peanut butter, soy sauce and water. Stir well. Add sugar, garlic and Tabasco then gradually stir in extra water. Refrigerate for at least 30 minutes to allow the flavours to develop.
2. Place 2 tablespoons of the sauce into a separate dish and set aside.
3. Thread the chicken onto six soaked wooden skewers. Brush the chicken with the larger amount of peanut sauce and arrange them onto a microwave safe rack in a circle. Cook for 2 1/2 minutes on MEDIUM HIGH (900W).
4. Turn the skewers and brush with the sauce. Cook for 2 1/2 minutes on MEDIUM HIGH (900W). Allow to stand for 2 minutes.
5. Garnish with the coriander and serve with the reserved peanut sauce.

SEAFOOD LAKSA

Serves 4-6

1 tablespoon lemon grass, finely sliced
270ml coconut cream
2 fish fillets or 300g king prawns or both
1 tablespoon oil
1-2 tablespoons laksa paste
Coriander
1 tablespoon fish sauce
1/2 packet of beans shoots
2 cloves garlic, crushed
100 g rice vermicelli noodles
1 125ml fish stock
fried onion flakes

1. In a large microwave safe glass cook laksa paste, oil, lemon grass and garlic for 1 minute on MEDIUM HIGH (900W). Stir once during cooking.
2. Add fish sauce, fish stock and cook for 2 minutes on MEDIUM HIGH (900W).
3. Add cubed fish and / or peeled deveined prawns and cook for 6 minutes on MEDIUM (700W). Stir halfway through cooking.
4. Stir through coconut cream and cook for a further 3 minutes on MEDIUM (700W).
5. Add noodles to a large bowl of boiling water and let stand for 5-10 minutes or until noodles collapse.
6. In a large serving bowl place bean shoots, noodles and then laksa soup.
7. Garnish with freshly torn coriander and fried onion flakes.

SMOKED SALMON FETTUCCINE

Serves 4

250 g fettuccine pasta, broken in half
60g butter
100 g smoked salmon (sliced)
100 g snow peas trimmed
100 g button mushrooms Finely sliced
2 cloves garlic, crushed
1 brown onion, finely chopped
300 g thickened cream
1 tablespoon fresh dill
1 cup parmesan cheese

1. Place fettuccine in a large microwave safe glass bowl with 6 cups of hot water. Cook for 15 minutes on MEDIUM HIGH (900W), stirring halfway. Stand for 5 minutes then drain.
2. In a large microwave safe glass bowl cook garlic, butter and onions for 1 1/2 minutes on 800W.
3. Add trimmed whole snow peas and button mushrooms and cook for a further 2 minutes on 800W.
4. In a large microwave safe bowl, place cream and cook for 4 minutes on MEDIUM (700W), stirring once during cooking.
5. In a large shallow dish, combine pasta, snow peas, button mushrooms, smoked salmon, dill and cream.
6. Sprinkle with parmesan cheese and cook for 3 minutes on 800W.

POULTRY

CHICKEN WITH BACON AND LEEK SEASONING

Serves 4

1.5 kg chicken (approximately)
60 g butter, melted
1 leek, finely chopped
1 rash bacon, chopped
3/4 cup wholemeal breadcrumbs
1 egg yolk
salt and pepper
20 g butter, melted extra

1. Combine butter, leek and bacon in a microwave safe glass bowl. Cook for 2 minutes on MEDIUM HIGH (900W).
2. Stir breadcrumbs, egg yolk and seasoning. Mix well.
3. Fill cavity of chicken with stuffing and tie the legs together with string.
4. Brush chicken with melted butter.
5. Place chicken on rack, breast-side down, cook for 15 minutes on MEDIUM HIGH (900W).
6. Turn over, cook for a further 20 minutes on 800W.
7. Stand covered with foil for 10 minutes before serving.

CHICKEN PENNE SALAD

Serves 6

1.5 kg chicken (approximately)
20 g butter
1 packet picador cheese (soft capsicum - flavored cheese)
1 cup chicken stock
1/2 red capsicum chopped
1/2 yellow capsicum chopped
1 stick celery chopped
2 cups penne pasta
4 cups hot tap water
1 tablespoon fresh chives

1. Brush chicken with butter melted for 20 seconds on HIGH (1200W).
2. Cook chicken for 35 minutes on MEDIUM HIGH (900W), turning halfway through cooking.
3. Cool and then remove chicken flesh from the bone.
4. Cook pasta in a large bowl for 15 minutes on MEDIUM HIGH (900W). Stand for 5 minutes stir and strain. Set aside to cool.
5. To melt cheese, place cheese and chicken stock in a microwave safe bowl and cook on 800W for 2 minutes. Mix well.
6. Combine all other ingredients and mix well with chicken pasta and sauce.

TANDOORI CHICKEN

Serves 4-6

2 fresh red chillies seeded
1 onion
2 cloves garlic crushed
2 teaspoons crushed ginger
2 tablespoons lemon juice
2 teaspoons ground cumin
1/2 salt and pepper
3 teaspoons ground coriander
2 whole cloves
1/4 teaspoon cinnamon
1 bay leaf
1/2 teaspoon turmeric
1/2 teaspoon nutmeg
2 teaspoons paprika
6 chicken thighs, skin removed
200 g low fat yoghurt

1. In a food processor, puree chillies, onion, garlic, ginger and lemon juice until smooth.
2. Mix cumin, pepper, coriander, cloves, cinnamon, bay leaf, turmeric, nutmeg and paprika in a small microwave safe glass bowl.
3. Cook for 1 minute on HIGH (1200W), stirring halfway through cooking. Remove bay leaf and cloves.
4. Combine chilli mixture, spices and yoghurt together. Spread over chicken.
5. Cover and marinate overnight, stirring occasionally.
6. Place on a roasting rack, cook for 20 minutes on MEDIUM HIGH (900W). Turn over halfway through cooking time.
7. Serve with boiled rice.

HONEY CHICKEN LEGS

Serves 4

250 ml soy sauce
4 tablespoons honey
1 tablespoon lemon juice
1 clove garlic crushed
1/2 teaspoon freshly grated ginger
2 tablespoons oil
8 large chicken legs
sesame seeds

1. Combine soy sauce, honey, lemon juice, garlic, ginger and oil in a small bowl.
   Pour over chicken and marinate for 2-3 hours.
2. Sprinkle with sesame seeds.
3. Arrange chicken legs on a roasting rack. Cook for 22 minutes on MEDIUM HIGH (900W) turning halfway through cooking time.
4. Allow to stand for 5 minutes.

CHILLI CON CARNE

Serves 4-6

1 kg mince
1 large onion finely chopped
825 g can peeled tomatoes
Salt and pepper
1-2 teaspoons chilli powder
1 tablespoon vinegar
1 teaspoon sugar
375 g jar tomato paste
425 can red kidney beans drained

1. Mix mince and onion together in a large microwave safe glass bowl. Cook for 10 minutes on MEDIUM HIGH (900W), stirring every 2 minutes. Drain excess liquid.
2. Stir in tomatoes, salt and pepper, chilli powder, vinegar, sugar, tomato paste and kidney beans.
3. Cook for 18-20 minutes on MEDIUM HIGH (900W), stirring twice during cooking.
4. Serve with boiled rice.

HONEY ROAST LAMB

Serves 4-6

1.5 kg leg of lamb
3 tablespoons honey
1 tablespoons Dijon mustard

1. Combine honey and Dijon mustard. Brush over lamb, save some mixture to brush over lamb at halfway stage
2. Place fat side down on a roasting rack.
3. Cook for 28 minutes on MEDIUM HIGH (900W).
4. Turn over halfway through cooking shielding shank with foil to prevent overcooking. Brush saved mixture over leg of lamb.
5. When cooked cover with foil and allow to stand for 10 minutes before carving.

SPECIAL FRIED RICE

Serves 6

2 cups jasmine rice (rinsed)
1 teaspoon vegetable stock powder
4 cups water
30 g butter
1 carrot grated
100 g green beans sliced
1/2 leek sliced (cut into quarters)
1 x 125 g can corn kernels
150 g bacon diced
2 eggs lightly whisked
2 tablespoons lite soy sauce
2 tablespoons sweet chilli sauce
1 tablespoon oyster sauce

1. In a large microwave safe glass bowl, add the rice, vegetable stock and water.
   Cook uncovered for 17 minutes on MEDIUM HIGH (900W). Stirring after 7-8 minutes. Stir with a fork and set aside.
2. In a large microwave safe glass bowl, melt butter on 800W for 30 seconds. Add the grated carrots, beans, leek and mix. Cook for 3 minutes on 800W, stirring every minute.
3. Add corn, bacon, lite soy sauce, sweet chilli sauce and oyster sauce and cook for 2 1/2 minutes on 800W.
4. In a small microwave safe glass bowl, cook eggs on 800W for 1 1/2 minutes, stirring every 30 seconds.
5. Add all the ingredients together and mix well.

MEAT

LASAGNE

Serves 8

MEAT SAUCE INGREDIENTS

30g butter
1 onion chopped
1 kg topside mince
1/4 cup tomato paste
300 g jar Napolitana
1 cup fresh butter mushrooms sliced
2 cloves garlic crushed (optional)
1 tablespoon fresh oregano
Salt and pepper to taste

CHEESE SAUCE INGREDIENTS

90 g butter
1/3 cup flour
1 1/4 cups milk
125 g tasty cheese, grated
200 g packet fresh lasagna sheets
100 g mozzarella cheese grated

MEAT SAUCE METHOD

1. Place butter and onion in a large microwave safe glass bowl, Cook for 2 minutes on HIGH (1200W).
2. Stir mince. Cook uncovered for 10 minutes on MEDIUM HIGH (900W), stirring every 2 minutes. Drain excess fat.
3. Stir tomato paste, napolitana sauce, mushrooms, garlic, oregano, salt and pepper.

CHEESE SAUCE METHOD

1. Melt butter in a medium sized microwave safe glass bowl for 40 seconds on MEDIUM HIGH (900W). Stir in flour, cook for a further 40 seconds on MEDIUM HIGH (900W).
2. Gradually stir in milk. Cook for 4 minutes on 800W, stirring every minute.
3. Stir in cheese to taste.

TO ASSEMBLE

1. Use a 3 litre deep casserole dish.
2. Spoon meat sauce to just cover base of dish. Cover with a single layer of lasagna sheets.
3. Spoon over sheets one-third of meat sauce. Cover with one-third with cheese sauce.
4. Repeat the process 3 times, ending with cheese sauce.
5. Sprinkle with mozzarella cheese.
6. Cook for 10 minutes on MEDIUM HIGH (900W) with lid on. Remove lid and continue cooking for a further 8 minutes on MEDIUM HIGH (900W).
7. Allow to stand for 10 minutes before serving.
8. Serve with a fresh garden salad and bread.

GOLDEN CURRY SAUSAGES

Serves 4-6

1 kg sausages
1 onion finely chopped
40 g butter
3 teaspoons curry powder
1 1/2 cups water
2 tablespoons plain flour
1 carrot grated
2 tablespoons Worcestershire sauce
1 tablespoon brown sugar
2 tablespoons brown vinegar

1. Pierce sausages with a fork twice. Arrange on microwave safe rack.
2. Cook sausages for 14 minutes on MEDIUM (700W), turning halfway through cooking. After cooking slice into rounds.
3. Mix sugar, vinegar, curry powder, flour Worcestershire sauce and water together in a jug.
4. In a 3 litre casserole dish combine butter, onions and cook for 3 minutes on MEDIUM HIGH (900W) or until onions become transparent.
5. Add carrots, sausages and sauce. Mix well and cook for an extra 6 minutes on MEDIUM (700W).
6. Serve hot with Basmati rice and pappadums.

SHEPHERD'S PIE

Serves 6-8

4 large potatoes (approx 1kg)
Butter
Milk
2 tablespoons fresh chives chopped
Salt and pepper
1 kg minced beef
1 onion diced
2 tablespoons gravy powder
250 g frozen mixed vegetables
1 tablespoon Worcestershire sauce
1 can chopped tomatoes
2 tablespoons chopped parsley
60 g grated cheddar cheese
salt and pepper to taste

1. Peel and cut potatoes into 2.5 cm cubes. Place in a large microwave safe glass bowl. Add 2 tablespoons water, cover and cook for 15 minutes on HIGH (1200W) or until tender. Stir halfway through cooking. Drain.
2. Mash potatoes, add butter, milk, chives, salt and pepper until it forms a smooth consistency.
3. In a large bowl, combine mince and onion and cook for 9 minutes on 800W stirring every 2 minutes. Drain juice from meat.
4. Place frozen mixed vegetables in a shallow dish and cook for 3 minutes on 800W.
5. Add gravy powder, mixed vegetables, Worcestershire sauce, tomatoes, parsley and seasoning. Mix well.
6. Spoon mixture into a 25-20cm rectangular dish.
7. Spread mashed potato evenly over top of mixture. Sprinkle cheese on top
8. Cook for 23 minutes on 800W.
9. Allow to stand covered with foil for 10 minutes before serving.

RECIPES

INDEX

MEAT

CHILLI CON CARNE ⑪
GOLDEN CURRY SAUSAGES ⑩
HONEY ROAST LAMB ⑪
LASAGNE ⑩
SHEPHERD'S PIE ⑩
SPECIAL FRIED RICE ⑪

POULTRY

CHICKEN PENNE SALAD ⑫
CHICKEN SKEWERS IN FAMOUS PEANUT SAUCE ⑬
CHICKEN WITH BACON AND LEEK SEASONING ⑫
CRUNCHY CAMEMBERT CHICKEN ⑬
HONEY CHICKEN LEGS ⑫
TANDOORI CHICKEN ⑫

SEAFOOD

BOUILLABAISSE ⑭
CHEESY SALMON CANNELLONI ⑭
CHILLI PRAWNS WITH SNOW PEAS ⑭
CRAB MORNAY ⑭
PRAWN CREOLE ⑭
SEAFOOD LAKSA ⑬
SMOKED SALMON FETTUCCINE ⑬

VEGETABLES

CHILLI AND TOMATO SPAGHETTI ⑯
CHUNKY VEGETABLE SOUP ⑯
HONEY CARROTS ⑮
HONEY GINGERED VEGETABLES ⑮
POTATO, AVOCADO AND ONION SALAD ⑮
POTATO BAKE ⑯
THAI VEGETABLE NOODLE SOUP ⑯
VEGETABLE PLATTER ⑮

DESSERTS

BREAD AND BUTTER PUDDING ⑰
CARAMEL RICE PUDDING ⑰
CASHEW FUDGE ⑱
CHOCOLATE FUDGE CAKE ⑰
MOIST CARROT CAKE ⑰
PEPPERMINT CHOC HAZELNUT MOUSSE ⑰
PUMPKIN PIE ⑱

JAM

MIXED BERRY AND APPLE JAM ⑱
STRAWBERRY JAM ⑱

CHARTS

DEFROSTING ⑲
FROZEN VEGETABLE CHART ㉑
GENERAL INFORMATION ㉓
GLOSSARY OF TERMS ㉓
GUIDE TO COOKING EGGS ㉑
MICROWAVE: FRESH VEGETABLE CHART ⑳
REHEATING CONVENIENCE DEFROSTING CONVENIENCE-FOOD CHART ㉒
RICE AND PASTA COOKING CHART ㉑

SMART DEFROST MENU GUIDE

MEAT To use the following menus, press MEAT until the desired menu appears on the display.

Menu	Weight Range	Initial Temperature (approx.)	Procedure	Standing Time
Mince	0.5kg - 1kg	-18˚C	- Place mince on a defrost rack. - When the oven stops, turn over and shield warm portions with foil strips. - After defrost time, stand covered with foil.	10-15
Steak / Chops	0.5kg - 1kg	-18˚C	- Place steak / chops on a defrost rack. - When the oven stops, turn over and shield warm portions with foil strips. - After defrost time, stand covered with foil.	10-15
Roast Meat	1kg - 2kg	-18˚C	- Place roast meat on a defrost rack. - When the oven stops, turn over and shield warm portions with foil strips. - After defrost time, stand covered with foil.	15-20

SMART DEFROST MENU GUIDE

POULTRY/ FISH

To use the following menus, press POULTRY/FISH until the desired menu appears on the display.

Menu	Weight Range	Initial Temperature (approx.)	Procedure	Standing Time
Whole Chicken	1kg - 2kg	-18˚C	- Remove from original packaging. Shield wing and leg tips with foil. - Place breast side down on defrost rack. - When the oven stops, turn over and sheild warm portions with foil. - After defrost time, stand covered with foil.	15-20
Chicken Fillet	0.5kg - 1kg	-18˚C	- Place chicken pieces on a defrost rack. - When the oven stops, turn over and shield warm portions with foil strips. - After defrost time, stand covered with foil.	15-20
Fish Fillet	0.5kg	-18˚C	- Place fish fillets on a defrost rack. - When the oven stops, turn over and shield warm portions with foil strips. - After defrost time, stand covered with foil.	5

SMART SENSOR COOK MENU GUIDE

The final cooking result will vary according to the food condition (e.g. initial temperature, shape, quality). Check the food after cooking and if necessary continue cooking manually.

RICE/ QUINOA To use the following menus, press RICE/QUINOA until the desired menu appears on the display.

Menu	Weight Range				Initial Temperature (approx.)	Procedure	Standing Time (minutes)
White Rice	1 - 4 Cups				+40˚C Hot tap water	- Wash rice until water runs clear. - Place into a microwave safe bowl and cover with hot tap water. - Cook uncovered. - When the oven stops, stir and continue cooking. - After cooking stand and stir.	2
	Rice	1 Cup	2 Cups	4 Cups			
	Hot tap water	2 Cups	4 Cups	6 Cups			
Brown Rice	1 - 4 Cups				+40˚C Hot tap water	- Wash brown rice until water runs clear. - Place into a microwave safe bowl and cover with hot tap water. - Cook uncovered. - When the oven stops, stir and continue cooking. - After cooking stand and stir.	2
	Brown Rice	1 Cup	2 Cups	4 Cups			
	Hot tap water	2 Cups	4 Cups	6 Cups			
Quinoa	1 - 2 Cups				+40˚C Hot tap water	- Wash quinoa until water runs clear. - Place into a microwave safe bowl and cover with hot tap water. - Cook uncovered. - When the oven stops, stir and continue cooking. - After cooking stand and stir.	3
	Quinoa	1 Cup	2 Cups				
	Hot tap water	2 Cups	4Cups				

PASTA To use the following menus, press PASTA until the desired menu appears on the display.

Menu	Weight Range				Initial Temperature (approx.)	Procedure	Standing Time (minutes)
Pasta	100g - 400g				+40˚C Hot tap water	- Place into a microwave safe glass bowl and cover with hot tap water. - Cook uncovered. - When the oven stops, stir and continue cooking. - After cooking, stand and stir.	2
	Pasta	100g	200g	400g			
	Hot tap water	2 Cups	4 Cups	6 Cups			
Wholemeal Pasta	100g - 400g				+40˚C Hot tap water	- Place into a microwave safe glass bowl and cover with hot tap water. - Cook uncovered. - When the oven stops, stir and continue cooking. - After cooking, stand and stir.	2
	Wholemeal Pasta	100g	200g	400g			
	Hot tap water	2.5 Cups	4.5 Cups	6.5 Cups			

SMART SENSOR COOK MENU GUIDE

POTATO To use the following meus,press POTATO until the desired menu appears on the display.

Menu	Weight Range	Initial Temperature (approx.)	Procedure	Standing Time (minutes)
Jacket Potato	1 - 4 Potatoes (approx. 200 - 250g)	+20˚C Room Temperature	- Use cleaned and dried potatoes. - Pierce the skin twice with a fork on each side. - Place directly onto the turntable. - When oven stops, turn over and continue cooking.	5
Sweet Potato Jacket	1 - 2 Potatoes (approx. 500g - 600g)	+20 ̊C Room Temperature	- Use washed and dried sweet potatoes. - Pierce the skin twice with a fork on each side. - Place directly onto the turntable. - When oven stops, turn over and continue cooking.	5
Boiled Potato	1 - 4 Potatoes (approx. 200 - 250g) Potato: 1 / 2 / 4 Hot tap water: 1/4 Cup / 1/2 Cup / 1 Cup	+40˚C Hot tap water	- Cut potato into cubes. - Place into a microwave safe glass bowl with hot tap water. - Cook uncovered.	5

VEGETABLES To use the following meus,press FRESH VEGETABLES until the desired menu appears on the display.

Menu	Weight Range	Initial Temperature (approx.)	Procedure	Standing Time (minutes)
Fresh Vegetables	150g - 500g	+3˚C Refrigerated	- Wash the vegetables. - Place into a microwave safe glass bowl with 1 tablespoon of water. - Cook uncovered.	2
Frozen Vegetables	150g - 500g	-18 ̊C	- Place into a microwave safe glass bowl. - Cook uncovered.	2

SMART CONVENIENCE MENU GUIDE

REHEAT PLATE

Menu	Weight Range		Initial Temperature (approx.)	Procedure
Reheat Plate	1 Serve (approx. 400g)		+3˚C Refrigerated	- Cover with plastic wrap.
	Meat	Vegetables		
	200g	200g		

REHEAT BEVERAGE

Menu	Weight Range	Initial Temperature (approx.)	Procedure
Reheat Beverage	1 Cup (approx. 250ml)	+20˚C Room Temperature	- Use a microwave safe mug.

MELT/ SOFTEN

To use the following menus, press MELT/SOFTEN until the desired menu appears on the display.

Menu	Weight Range	Initial Temperature (approx.)	Procedure
Chocolate	100g - 250g	+3˚C Refrigerated	- Break chocolate into cubes and place into a microwave safe glass bowl. - Cook uncovered. - When the oven stops, stir and continue cooking.
Butter	100g - 250g	+3˚C Refrigerated	- Chop butter into cubes and place into a microwave safe glass bowl. - Cook uncovered. - When the oven stops, stir and continue cooking.
Cream Cheese	100g - 250g	+3˚C Refrigerated	- Chop cream cheese into cubes and place into a microwave safe glass bowl. - Cook uncovered. - When the oven stops, stir and continue cooking.

SMART CONVENIENCE MENU GUIDE

SCRAMBLED EGGS

Menu	Weight Range		Initial Temperature (approx.)	Procedure
Scrambled Eggs	Serve (approx. 100g - 150g)		+3˚C Refrigerated	- Whisk eggs and milk in a microwave safe glass bowl. - When the oven stops, stir and continue cooking.
	Eggs	Milk		
	2	2 Tablespoons		

MUG CAKE

Menu	Weight Range	Initial Temperature (approx.)	Procedure
Mug Cake	1 Mug Cake	+20˚C Room Temperature	Recipe: Ingredients: 2 Tablespoons butter, melted 2 Tablespoons milk 3 Tablespoons flour 2 Tablespoons sugar 1 Tablespoon flavouring of your choice eg. cocoa, vanilla Method: Combine all of the ingredients in a microwave safe mug.

COOKWARE AND UTENSIL GUIDE

Utensil	Use	Advice
GLASSWARE/CERAMIC (HEAT RESISTANT)	YES	GLASSWARE • Ordinary glass is not suitable for cooking but may be used for short periods for heating foods. CERAMIC • Most ovenproof china, and ceramics, are suited. • Avoid dishes that are decorated with gold or silver leaf. • Avoid using antique pottery. • If unsure, check with the manufacturer.
METAL COOKWARE	NO	• Metal cookware should be avoided when cooking in the microwave oven. • Microwave energy is reflected by metal.
PLASTIC WRAP/ OVEN BAGS (MICROWAVE SAFE ONLY)	YES	• Plastic wrap can be used to cover food. • Some shrinkage of the wrap may occur, over an extended cooking time. • When removing wrap, lift it in such a way to avoid steam burns. • Do not tie oven bags with metal twist ties, substitute with string. • For cooking food with high fat content, do not bring the wrap in contact with the food as it may melt.
ALUMINIUM FOIL	FOR SHIELDING	• Small amounts may be used to shield certain parts of meat and fish when cooking or defrosting. • Remove food in foil trays, if possible, and place in a microwave safe dish. • If not possible, place the foil tray onto a heat proof plate allowing 2.5 cm between the walls of the oven.
STRAW AND WOOD	NO	• Excessive over heating of these materials may cause a fire in the microwave oven.
PAPER	YES	• Paper towels and waxed paper are suitable to use to prevent splatters. • These are suitable for use when reheating foods or for short cooking times.
PLASTIC COOKWARE MICROWAVE SAFE	YES	• Ideal for cooking, reheating and defrosting. • Some microwave safe plastic cookware are not suitable for cooking foods with high fat and sugar content.
BROWNING DISH	YES	• Ensure that the preheating time of the dish is not exceeded. • Ensure that a microwave heat proof dinner plate or suitable insulator be placed between the turntable and the browning dish.
THERMOMETERS • MICROWAVE SAFE • CONVENTIONAL	YES NO	

SMART COOKING GUIDES

HELPFUL HINTS	COOKWARE AND UTENSIL GUIDE	SMART CONVENIENCE MENU GUIDE	SMART SENSOR COOK MENU GUIDE	SMART DEFROST MENU GUIDE	RECIPES
①	②	③④	⑤,⑥	⑦,⑧	⑨~㉕

HELPFUL HINTS

1. THE ARRANGEMENT
   Arrange foods carefully. Place thickest areas toward outside of dish.

2. TURNING
   Foods such as poultry and joints of meat should be turned over after half the cooking time.

3. COVERING
   Cover foods in the microwave if you would normally cover the food in your ordinary oven, or to retain moisture. Cover foods such as Vegetables, Casseroles, or when Reheating.

4. PIERCING
   Pierce potatoes, eggs, tomatoes or any foods with a skin or membrane to allow steam to escape.

5. SHIELDING
   Shield using small pieces of aluminium foil to shield thin areas of meat, fish and poultry or edges of cakes to prevent overcooking.

6. STANDING TIME
   Standing time is important. After cooking or defrosting ensure adequate standing time. This allows the food to continue cooking or heating. Refer to cooking guides for each menu or according to manufacturers instructions.

7. STIRRING
   Stir foods from the outside to the centre of the dish, once or twice during cooking if possible.
   Eg. Casseroles and Sauces.

8. SIZE
   Small pieces cook faster than large ones. To speed up cooking, cut pieces smaller than 5 cm so microwaves can penetrate to the centre from all sides. For even cooking, make all the pieces the same size.

9. DENSITY
   The depth to which microwaves penetrate food varies depending on the food's density. Porous foods like minced beef or mashed potatoes microwave faster than dense ones like steak or whole potatoes.

10. FAT AND BONE
    Marbling within meat, or a thin, even layer of fat on a roast, speeds cooking. Large fatty areas or excess drippings in dish attract energy away from meat, and slows cooking. Centre bones do not affect cooking, but bone on the side of meat conducts heat to the areas next to it.

11. STARTING TEMPERATURE
    Frozen or refrigerated foods take longer to heat than food at room temperature. Cooking times in this book are based on normal storage temperatures. Since rooms, refrigerators and freezers differ in temperature, check cooking result at the minimum time.

12. QUANTITY
    Microwave cooking times are directly related to the amount of food in the oven. Because energy is absorbed by the food itself, one potato or a single piece of chicken cooks rapidly. When the energy is divided among several items, cooking takes more time.

13. CONDENSATION
    Condensation is a normal part of microwave cooking. The humidity and moisture in food will influence the amount of condensation in the oven. Generally, covered foods will not cause as much condensation as uncovered foods. Ensure that the ventilation openings are not blocked.

14. GENERAL
    Your microwave oven is capable of heating food and beverages very quickly therefore, it is very important that you select the appropriate cooking time and power level for the type and quantity of food to be heated. If you are unsure of the cooking time and power level required, begin with low cooking times and power levels until the food is sufficiently heated evenly throughout.

QUICK REFERENCE GUIDE

FEATURE	QUICK OPERATION GUIDE
Smart Sensor Cook	To reheat 150g fresh vegetable. [VEGETABLES] x 1 → [START +30SEC.]
Convenience	To cook Scrambled Eggs. [SCRAMBLED EGGS] x 1 → [START +30SEC.]
Melt/Soften	To melt 100g Chocolate. [MELT/ SOFTEN] x 1 → [START +30SEC.] → Weight [1] [0] [0] → [START +30SEC.]
Defrost	To defrost 0.5kg of Chicken Fillets. Menu [POULTRY/ FISH] x 2 → [START +30SEC.] → Weight [0] [5] [0] → [START +30SEC.]
Instant Cook	Just One Touch [START +30SEC.] Within 30 seconds of closing the door, cooking completion or pressing the STOP/CLEAR pad.
Variable Cooking Control	To soften Cream or Butter for 40 seconds on 400W. [POWER LEVEL] x 8 → [START +30SEC.] → Cooking Time [4] [0] → [START +30SEC.]
Timer	To set for 3 minutes. [CLOCK/ SET TIMER] x 2 → [START +30SEC.] → [3] [0] [0] → [START +30SEC.]
Child Lock	To lock. [0] Press for 3 seconds To unlock. [STOP CLEAR] Press for 3 seconds
Clock	To set for 11:45 am [CLOCK/ SET TIMER] x 1 → [START +30SEC.] → [1] [1] [4] [5] → [START +30SEC.]

SHARP

SHARP CORPORATION

MADE IN CHINA

PN.:16170000A90089